ILLUSTRATED PARTS BREAKDOWN - IPB

Bill of Materials - BOM

1812 Access Plus Surface Mount
1812-090

Item	Part Number	Quantity	UM	Description
10	1502-005	1	EA	Cover Plastic
15	1812-023	1	EA	Decal FCC
20	1400-009	1	EA	Decal Identification
25	1804-039	2	EA	Retaining Strip Keypad
30	2599-008	1	EA	Label Patent
35	2356-006	1	EA	PCB LED Single LED
40	4001-035	1	EA	Lock N16058BDxSFx2K Key 16120
43	1702-501	1	EA	Cam 7/8”
50	2902-003	13	EA	Nut Nylon Lock 6-32
55	1812-102	1	EA	Box Phone Surface for 1871
57	1998-010	1	EA	PCB Microphone Short, SMT
60	1812-059	1	EA	Faceplate Phone Lghtd Btn
65	1812-022	1	EA	Subplate Phone Lghtd Btn
70	1970-010	1	EA	PCB AccessPlus
75	1875-010	1	EA	PCB Pass Switch
77	2616-443	4	EA	Screw Phillips
80	2616-001	4	EA	Screw Phillips Head 6-32 x 3/8
85	1860-126	4	EA	Washer Nylon Shoulder
86	1860-032	4	EA	Washer Nylon Retaining #6
90	2616-003	4	EA	Screw Phillips Head 6-32x3/4SS
95	2904-002	2	EA	Screw Round Head 4-40 x 3/8”
97	2900-928	1	EA	Standoff Stel Male/Female 1/4”
100	3140-045	1	EA	Label 1812 New Wiring
105	1804-060	1	EA	Transformer 16.5 VAC 20VA plug
115	1804-028	2	EA	Mount Wire Clip
121	1812-131	1	EA	Bracket Microphone
125	1804-058	1	EA	Speaker Mylar 8 ohm 3.5”square
130	1895-017	1	EA	Keypad 10 Pin Numbers Header
133	1804-038	1	EA	Wire Ribbon Cable Assy 10 Cond
135	1812-004	1	EA	Switch Push Button N.O. Lghted
140	1971-190	1	EA	Wire Harness 1812 Front Panel
145	1804-031	3	EA	Tie Wrap 4”
151	2600-734	1	EA	Nameplate Plastic DKS Small
152	2802-040	2	EA	Washer Push on Clamp
153	1897-050	2	EA	Gasket Support Thick 1/16”
160	2600-884	1	EA	Label E.T.L. Separable
180	1800-018	1.66	FT	Weather Strip .125”x .187”
185	1804-196	1	EA	Speaker Gasket 1/16” thick
190	1897-053	1	EA	Gasket, Microphone
195	2600-794	1	EA	Hole Plug Blk Nylon .187” dia.
200	1812-168	1	EA	Manual 1812 Access+ Quickstart
205	1812-160	1	EA	CD Remote 1812 Program
210	1812-162	1	EA	Manual 1812 Access Plus
215	1812-164	1	EA	Caution Sheet 1812 16VAC
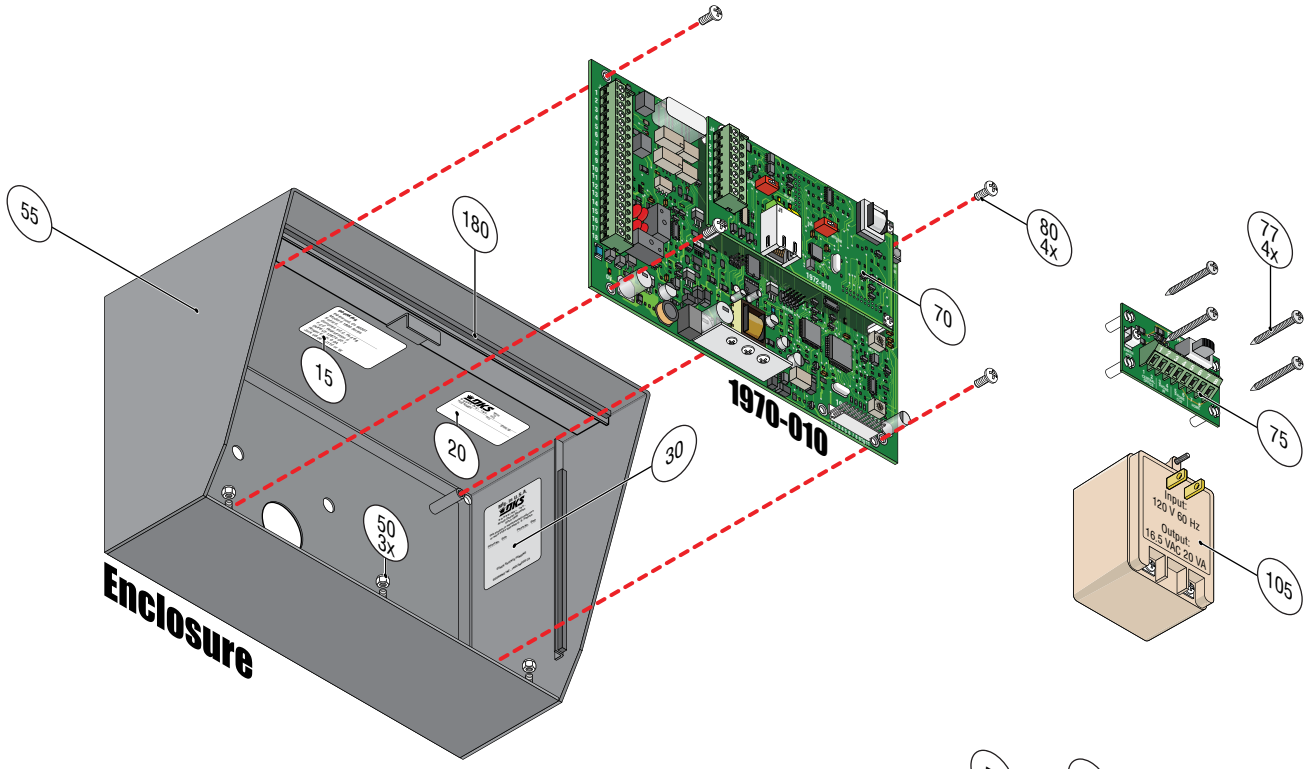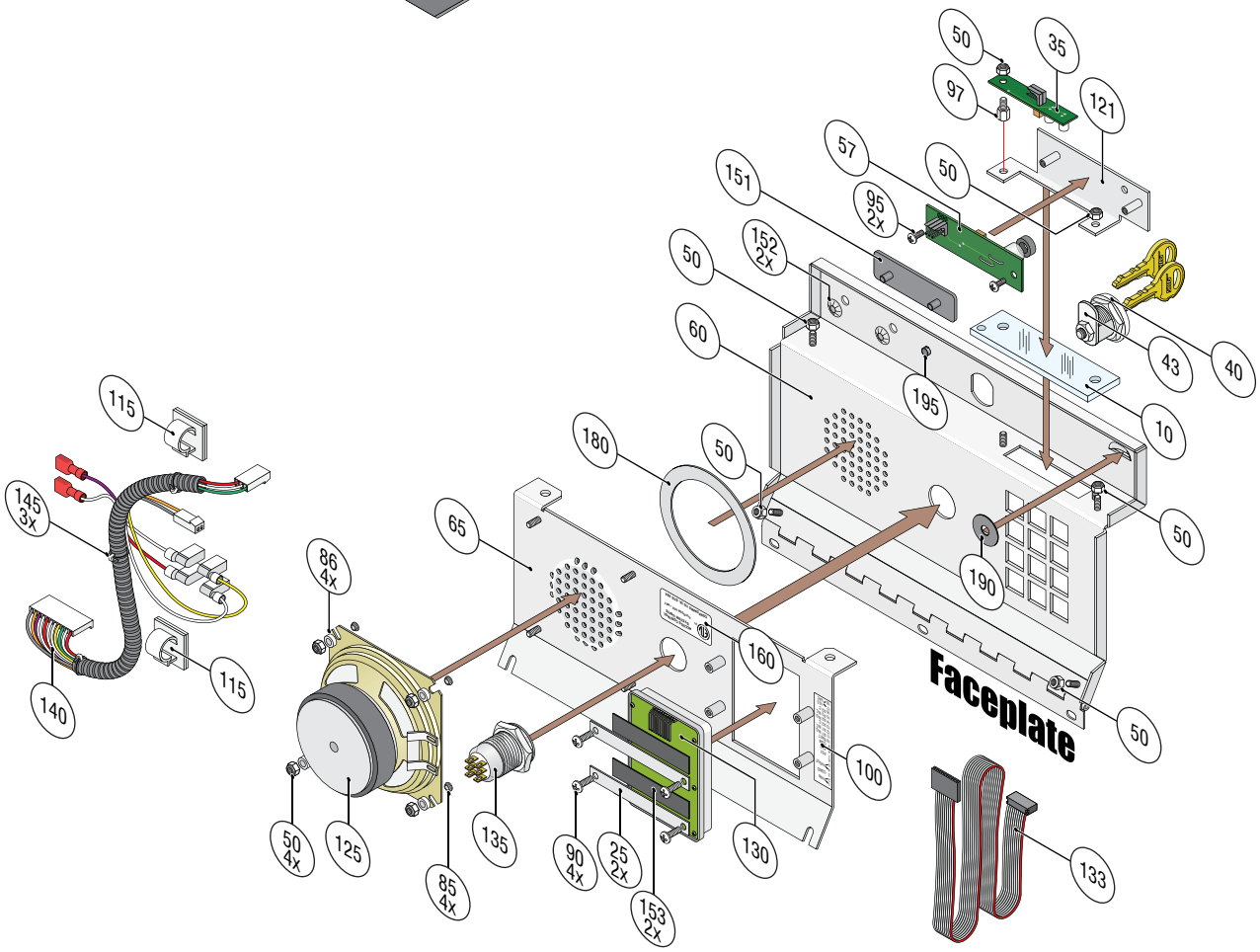
1812 Access Plus Surface Mount