DOORKING

1834 90 SERIES
TELEPHONE ENTRY SYSTEM



Shown with 12 Gauge Stainless Steel Hood
sold separately

Best suited for applications requiring control of a single door or gate and in applications where card readers or other expansion options are not required

- Provides both resident and visitor access control into apartment buildings, gated communities, condominiums, office buildings, factories and industrial sites
- Built-In electronic directory
- Large, easy-to-use A-Z-CALL buttons
- Program from the DKS Cloud (requires DKS connection service subscription) with your laptop or tablet or from your dedicated PC using the Remote Account Manager software (free download at doorking.com/software).
- Voice and data programming connection via cellular, internet, or copper POTS lines
- 2-Year limited factory warranty

4G LTE CELLULAR | VoIP INTERNET | TELEPHONE

Voice and Remote Programming
use DKS service options for connection and programming



Optional
internal TCP / IP for internet connection



Internal LED
lit keypad and A-Z-CALL buttons



DKS Cloud Programming
available with DKS Cellular, VoIP Internet subscriptions.

One Box That Mounts Anywhere



Surface | **Flush** | **Post**
shown with trim ring sold separately

ACCESS CONTROL SOLUTIONS

1834 90 SERIES
TELEPHONE ENTRY SYSTEM

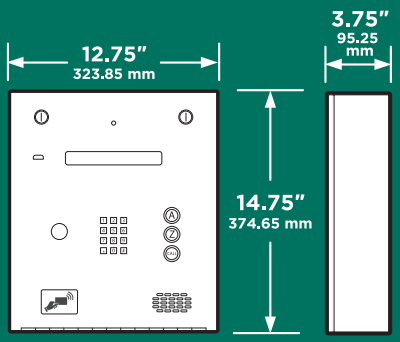

1834 90 SERIES

OPTIONAL MOUNTING ACCESSORIES

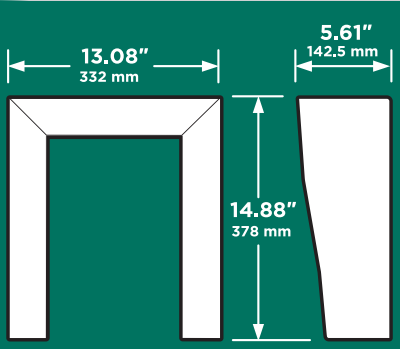

1814-185 Black Hood

1814-180 Stainless Steel Hood

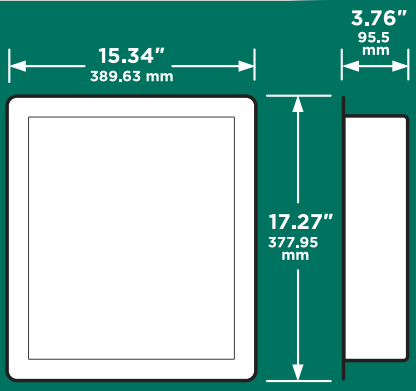

1814-200 Stainless Steel Flush Mount Kit

1834 90 SERIES

PHONE # MEMORY	3000 Phone Numbers, 255 Area Codes
ENTRY CODES	3000 *(4-digit)*
DEVICE CODES	0
DOOR CONTROL	2 Entry Points
DIRECTORY	Single-Line 20-Character Super-Twist LCD Display *(1/2 inch characters)*
ELEVATOR CONTROL	No
PROGRAMMING	DKS Cloud or a PC with Remote Account Manager Software*
TRANSACTION BUFFER	8000 Events

*** DKS Remote Account Manager Software for PC is available as a free download at doorking.com/software. Cloud Account Manager Programming is available at doorking.com/easy-connect/programming/cloud**

TECHNICAL FEATURES

MECHANICAL

Stainless steel faceplate

Galvanized steel sub-plate

Metal internally-lit LED keypad and A-Z-CALL buttons

Offset speaker holes for protection

Built-in postal lock provision

Flush mount requires flush mounting kit

Stainless steel & black 12 gauge hood available

Enclosures are rated NEMA 4x

Internal provision for TCP/IP adapter (1830-185, 1830-186 only)

Space for optional LCD heater

CONNECTION OPTIONS[1]

Cellular *powered by AT&T 4G LTE*

Internet *select DK VoIP or your own VoIP provider*

POTS *Plain Old Telephone Service*[2]

1. Connection options noted will incur additional cost for required hardware and/or service subscriptions. DKS Cloud programming included at no charge with DKS connection subscriptions.

2. POTS connection is not recommended for programming as modem communications can no longer be guaranteed.

SPECIFICATIONS

16 VAC *(2 Power Transformers included)*

Full duplex hands-free voice communication

Programmable directory codes *(1 to 4 digits)*

10 & 11-digit dialing capability

Built-in clock / calendar

Live Transactions feature *(requires TCP / IP internet connection or RS-232 connection)*

MISCELLANEOUS

Environmental: 10º F to 145º F (-12° C to 62° C)

Heater Kit (P/N 2600-584) Recommended when temperatures routinely fall below 35° F (1.6° C)

Optional high-resolution camera kits *additional CCV equipment and cabling required*

Shipping weight approximately 15-20 lb (6.8-9 kg)

A card reader can be installed in the 1834 cabinet. However, the 1834 has no input for a card reader and this card reader would have to be connected to a separate access controller. For an integrated built-in card reader, see our 1835 or 1837 90 Series models.

FCC (US) DUF6VT-12874-OT-T
DOC (CAN) 1736 4528 A

Conforms to UL STD 294
Certified to ULC S319

AT&T, the AT&T logo and all other AT&T marks contained herein are trademarks of AT&T Intellectual Property and/or AT&T affiliated companies.

DoorKing® Inc.
Access Control Solutions since 1948

120 S. Glasgow Avenue,
Inglewood, California 90301 U.S.A.
Tel: 310-645-0023 FAX: 310-641-1586
www.doorking.com

© 2026 All Rights Reserved.
Product specifications may change without notice. Rev. 11/26

MADE IN USA

MEMBER:

AFA American Fence Association · CANASA · DASMA · IDA · NAA National Apartment Association · National Parking Association · NOMMA · Self Storage Association · SIA

DISTRIBUTED BY: