Installation/Owner's Manual

Model 6524-381

Solar Powered Vehicular Swing Gate Operator

Use this manual for circuit board 4100-018 Revision A or higher.

6524-066-G-7-26

For AC Power, See 6524-065 AC Power Manual

Entrapment Protection must be provided for the gate system where the risk of entrapment or obstruction exists. The operator will NOT run without one or more monitored type B1 or B2 entrapment protection devices in EACH entrapment area.

UL 325 August 2018 Standard

Solar Powered

Bi-Parting Gate Operators CANNOT be used with Solar Applications.

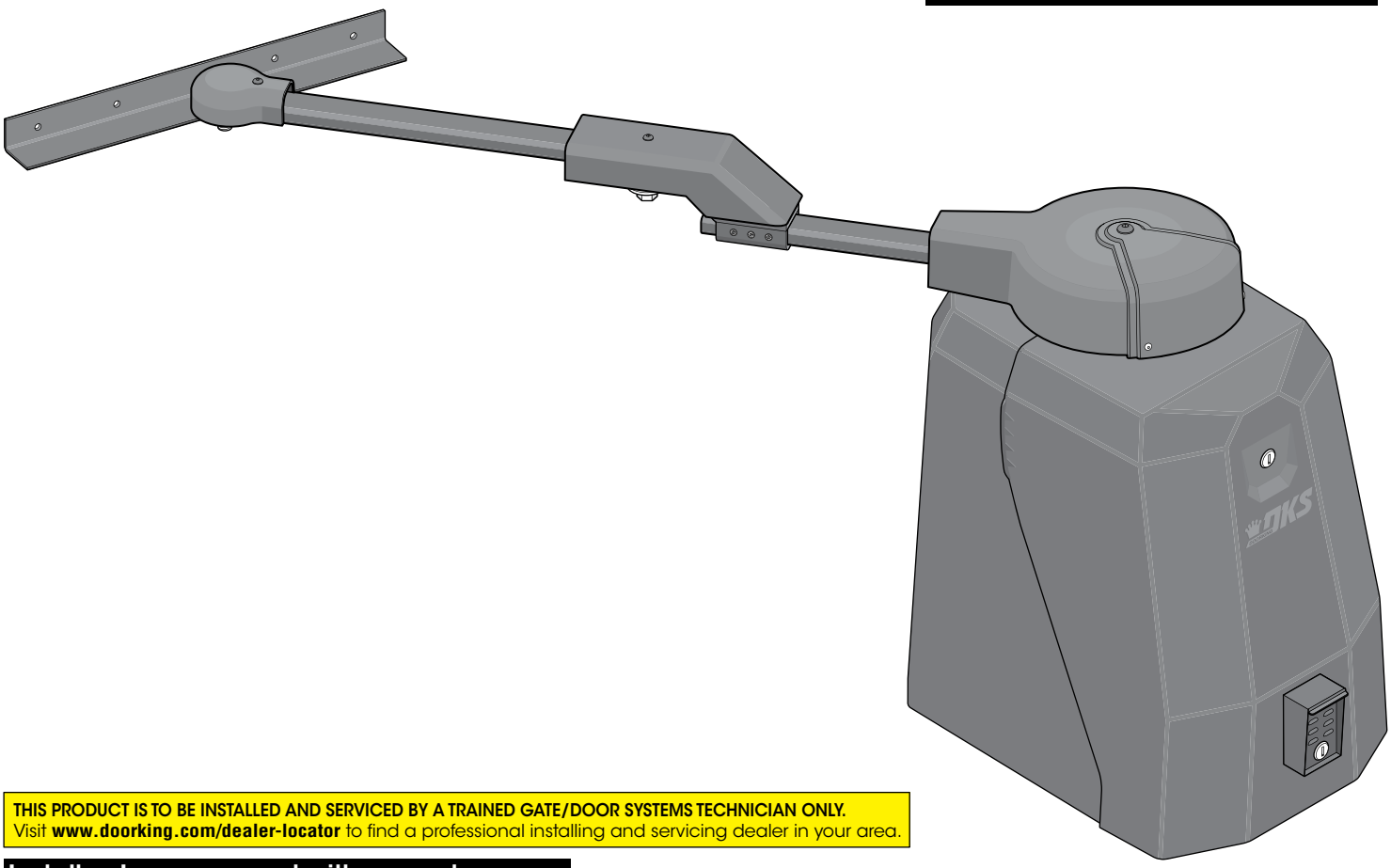

THIS PRODUCT IS TO BE INSTALLED AND SERVICED BY A TRAINED GATE/DOOR SYSTEMS TECHNICIAN ONLY.
Visit **www.doorking.com/dealer-locator** to find a professional installing and servicing dealer in your area.

Installer: Leave manual with property owner.

Solar Powered

Date Installed: _____

Installer/Company Name: _____

_____

Phone Number: _____

Circuit Board Serial Number and Revision Letter: _____

Property Owner: Checklist in back of manual to review and verify new installation with Installer.

Copyright 2026 DoorKing®, Inc. All rights reserved.

Intertek 9900288 — Listed to ANSI/CAN/UL 325

Proud Supporter of IDEA Certification Services
dooreducation.com

DOORKING®

QUICK GUIDE: DIP-Switches

See page 23 for more information about DIP-switches.

Reset button on circuit board **MUST** be pressed before new DIP-switch settings will take affect.
Note: Alarm reset button **WILL NOT** reset circuit board after changing DIP-switch settings.

SW 1 (Top 8 Switches)

Switch	Function	Setting	Description
1	Operator Opening Direction	Opens Clockwise 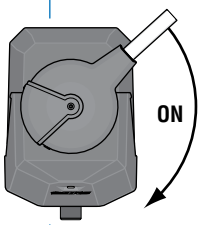 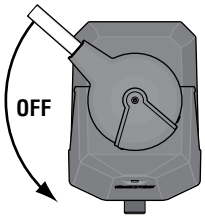 Opens Counter-Clockwise	Changes direction operator will cycle open upon initial power up and open command.
2	Auto-Close Timer	OFF	Auto-close timer is OFF. Manual input required to close gate.
		ON	**Normal Setting.** Auto-close timer is ON. Adjustable from 1-23 seconds.
3	Exit Loop Port Output	OFF	The output wired to main terminal 4 becomes the output from the exit loop detector plugged into the **EXIT Loop port**. DoorKing P/N 9416-010 or P/N 9415-010 **ONLY**
	Full Open Input	**ON**	**Normal Setting.** Main terminal 4 is a normal full open input.
4	Reverses Gate	**OFF**	Input to main terminal 10 and/or reverse loops will **reverse** gate during **close** cycle.
	Not Used	ON	**Do Not** use this setting for the 6524.
5	Quick-Close Timer Override (Slide Gates ONLY)	**OFF**	Quick-close feature is OFF.
		ON	Quick-close feature is ON. Opening gate will stop and begin to close as soon as all reversing inputs (Reverse loops, photo sensors) are cleared regardless of the distance the gate has opened. Used for slide gates only.
6 and 7	Relay: Main Terminals Terminal 13-14	6-**OFF** 7-**OFF**	**Normal Setting.** Relay activates when gate is at open limit.
		6-OFF 7-ON	Relay activates when gate is not closed.
		6-ON 7-OFF	Relay activates when gate is opening and open.
		6-ON 7-ON	Relay activates during opening and closing cycle.
8	Accessory Power	**OFF**	24 VDC 500 mA **accessory power** for accessories connected to main terminal 12.
		ON	**DO NOT USE** for Solar.

Setting **MUST** be used

SW 2 (Bottom 8 Switches)

Switch	Function	Setting	Description
1 and 2	Select Operator Type	1-OFF 2-OFF	**DO NOT USE** for the 6524. Slide Gate Operator
		1-OFF 2-ON	**Swing Gate Operator**
		1-ON 2-OFF	**DO NOT USE** for the 6524. Barrier Gate Operator
		1-ON 2-ON	**DO NOT USE** for the 6524. Overhead Gate Operator
3	Input Power Failure Mode	OFF	**DO NOT USE** for Solar.
		ON	Gate **operates normally** until batteries get low. Gate will **CLOSE and Shutdown operator** in close position until battery power reaches an operable level again.
4	Reverse/Shadow Input	**OFF**	Main terminal 10 is a REVERSE input.
		ON	**DO NOT USE** for solar power.
5	Overlapping Bi-Parting Gates	**OFF**	Switch 5 **MUST** be turned **OFF** for the 6524.
		ON	**DO NOT USE** for solar power. Overlapping gates **ARE** used (Dual swing gates ONLY). Secondary gate starts to open a few seconds before primary gate starts.
6	Circuit Board Power Management	OFF	**DO NOT USE** for Solar. For **115/230 VAC** input power. Board has **Constant power**.
		ON	Used for **Solar** input power. Board **Minimizes power** when not in use. All terminals shut down power except **main terminals 1, 2** and **3**.
7 and 8	Not Used	**OFF**	Switches 7 and 8 **MUST** be turned **OFF** for Model 6524 operator.

See page 27 for terminal wiring.

QUICK GUIDE: Terminal Descriptions

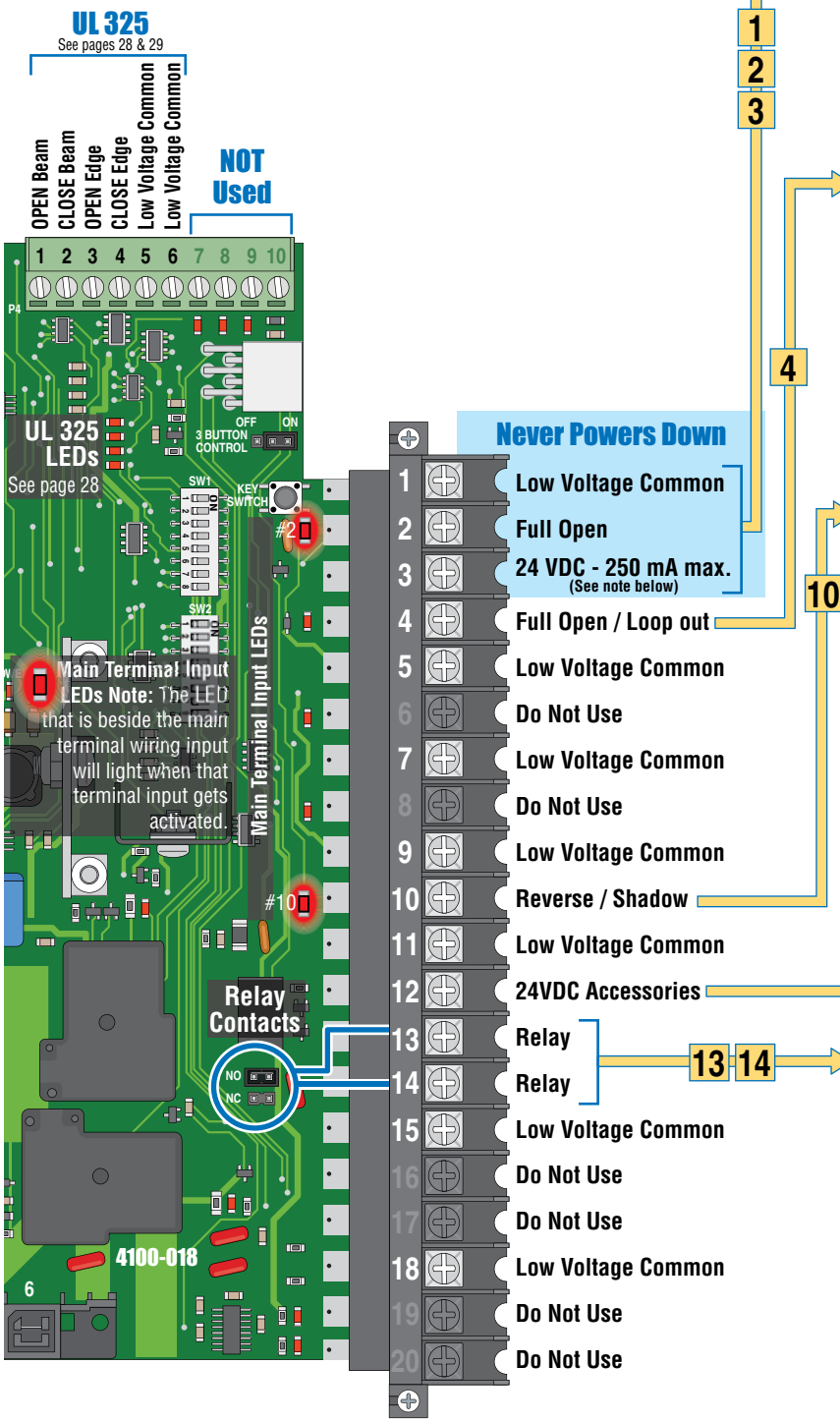

Terminals 1, 2 and 3 are ALWAYS powered up, even after circuit board has powered down to manage the power drain on the batteries.
Opening devices MUST connect to terminal 2.
IMPORTANT: **ANY** access control device (radio receiver, key switch, exit loop or safety opening device) needs a relay contact time of **AT LEAST 1 SECOND** to bring the circuit board out of "idle time" and operate gate. See page 20.

- If SW 1, **switch 3** is **ON**, functions as a normal full open input (Normal setting).
- If SW 1, **switch 3** is **OFF**, input to terminal #4 becomes the output from the EXIT loop detector plugged into the **EXIT loop port**. (Used for specialized functions).

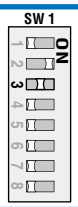

This input ONLY functions when gate is **fully opened** or in the **closing cycle**.

- SW 1, **switch 4** MUST be **OFF.** SW 2, **switch 4** MUST be **OFF.** When gate is closing, an input to main terminal 10 (eg: photo beam gets blocked) will **reverse** and open the gate. **Note:** If the auto-close timer is **ON**, when gate reaches the open position, timer will time out and close the gate.
- **DO NOT** turn SW 1, switch 4 **ON**.
- **DO NOT** turn SW 2, switch 4 **ON**.

Note: Main terminal 10 is not available for a photo sensor when using a SHADOW LOOP. See page 30 about shadow loop connection.

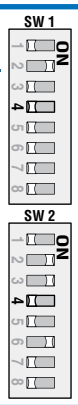

SW1, **switch 8 MUST be OFF**: 24-VDC 500 mA accessory power can be provided for desired accessories wired to terminal 12.

DO NOT turn ON SW1, switch 8.

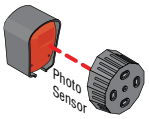

Note: power to terminal 12 is ONLY available when the gate is opening, open, or closing. Power is **OFF** when the gate is closed.

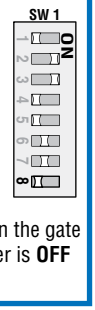

Operation of relay is dependent on setting of SW 1, **switches 6 and 7**. **Relay contacts** can be set for Normally Open (NO) or Normally Closed (NC) operation.

Contact rating is 1 amp maximum at 24-volts DC.

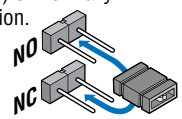

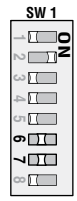

Note: Board relay is used for a shadow loop when using a SHADOW LOOP. See page 30 about shadow loop connection.

Terminal #3 Note:
Exceeding 250 mA of power from this terminal may cause the circuit board transformer to overheat, causing intermittent problems.

SPECIFICATIONS FOR MODEL 6524-381

Use this manual for the Model 6524-381 operator with circuit board 4100-018 Rev A or higher ONLY.

OPTIONAL DKS Solar Power Kit Recommended
Two 12 Volt 18 Amp/Hr Batteries
One 24 VDC 10 Watt Solar Panel
P/N 2000-070

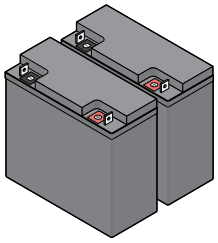

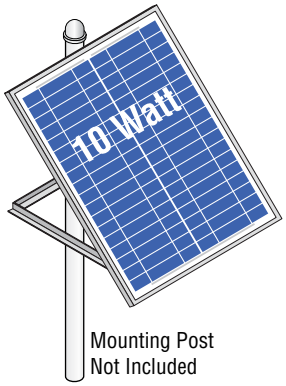

Class of Operation	UL 325 Class I, II, III, IV
Type of Gate	Vehicular Swing Gate Only
Motor	Quadra Drive DC Motor
Power Input: Volts@Amps	24 VDC @ 8 Amps
Batteries	None Included (24 VDC Output Required)
Maximum Gate Cycles	DKS Solar Power Kit: Solar Panel Power - Continuous DKS Solar Power Kit: ONLY Battery Power - 150+ Cycles Unkown when using Third Party Solar Power Setup **Battery Power Note:** The number of gate cycles when using **ONLY** battery power **WILL** vary depending on gate weight, gate length, operating condition of gate hardware, temperature and amount of charge in batteries.
Gate Speed	12-14 Sec
Max Gate Weight	800 lbs - 362 Kgs
Max Gate Length	16 Ft - 4.8 Meters
Inherent Entrapment Protection Device	Inherent Reverse Sensor System (Type A)
External Entrapment Protection Device Inputs (Monitored Inputs)	Connection inputs for Non-contact Sensor - Photo Sensor (Type B1) Connection input for Contact Sensor - Reversing Edge (Type B2)

Entrapment Protection must be provided for the gate system where the risk of entrapment or obstruction exists. The operator will NOT run without one or more monitored type B1 or B2 entrapment protection devices in EACH entrapment area.

Type of wiring to be used on ALL external devices:
A) Type **CL2**, **CL2P**, **CL2R**, or **CL2X**.
B) Other cable with **equivalent** or **better** electrical, mechanical, and flammability ratings.

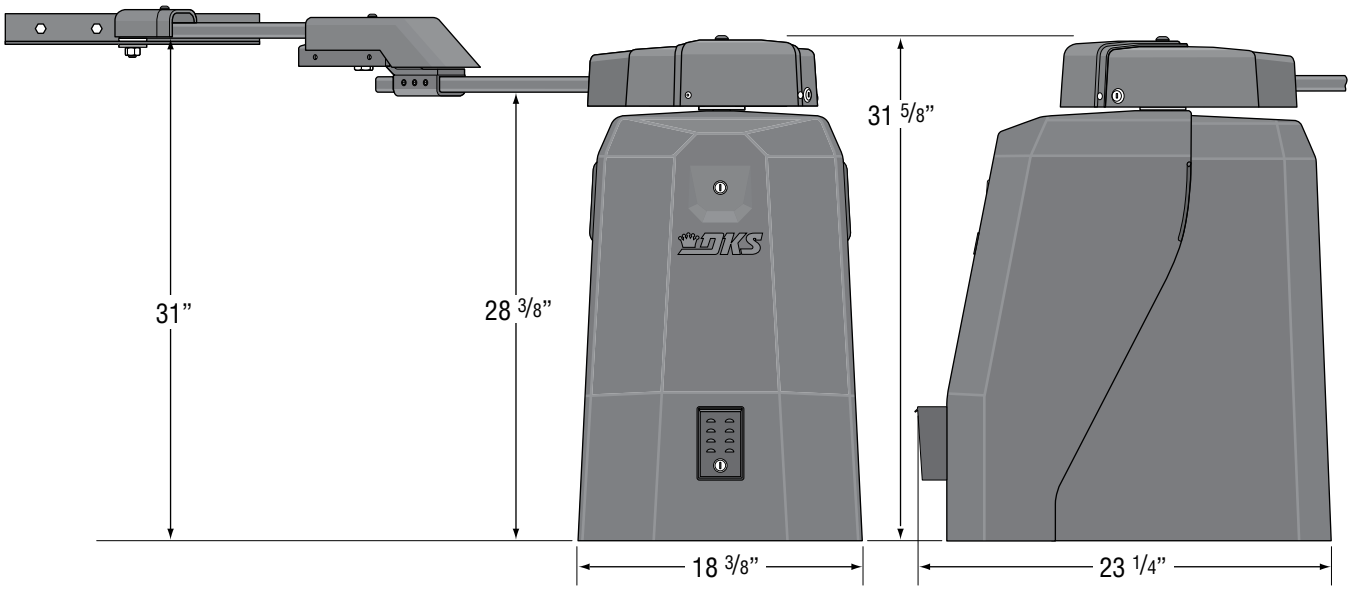

DoorKing, Inc. reserves the right to make changes in the products described in this manual without notice and without obligation of DoorKing, Inc. to notify any persons of any such revisions or changes. Additionally, DoorKing, Inc. makes no representations or warranties with respect to this manual. This manual is copyrighted, all rights reserved. No portion of this manual may be copied, reproduced, translated, or reduced to any electronic medium without prior written consent from DoorKing, Inc.

TABLE OF CONTENTS

QUICK GUIDES

Quick Guide: DIP-Switches ..... Quick Guide - 1
Quick Guide: Terminal Descriptions ..... Quick Guide - 2
Swing Gate Requirements 2-3
ASTM 2200 Standard for Gate Construction 4
Important Safety Instructions 4
Instructions regarding intended installation 4
Important Notices 5
UL325 Entrapment Protection 6
Glossary 7

SECTION 1 - INSTALLATION 8

1.1 Underground Conduit Requirements 8
1.2 Concrete Pad 8
1.3 Installation Layouts 9-12
1.4 Securing Operator to Pad 13
1.5 Attach Gate Bracket 13
1.6 Determining Arm Lengths 14
1.7 Installation of Warning Signs 14
1.8 Entrapment Protection Installation 15-16
1.9 Concerns BEFORE Solar Panel Installation 17
1.10 Solar Panel Positioning 18

SECTION 2 - SOLAR POWER TO OPERATOR 19

2.1 Solar Power Connections 19
2.2 Setting Input Power Jumper and Turning Power ON 20

SECTION 3 - ADJUSTMENTS 21

3.1 4100 Circuit Board Descriptions and Adjustments 21
3.2 DIP-Switch Settings for 4100 Circuit Board 22-23
3.3 Limit Sensors 24
3.4 Inherent Reverse Sensor Adjustment 25

SECTION 4 - WIRING TERMINALS 26

4.1 Terminal Descriptions 26
4.2 Control Wiring 27
4.3 Entrapment Protection Wiring 28-29
4.4 Plug-In Loop Detector Wiring 30
4.5 External Loop Detector Wiring 31

SECTION 5 - OPERATING INSTRUCTIONS 32

5.1 DC Power Switch and Alarm Reset Button 32
5.2 Shutdown Conditions 33-34
5.3 Manual Gate Operation 34-35

SECTION 6 - MAINTENANCE AND TROUBLESHOOTING 36

6.1 Maintenance 36
6.3 Troubleshooting 37-38
6.2 Built-In Diagnostics 38
6.4 Accessory Items 39
6.5 Gearbox Shaft Extension Replacement 40
Model 6524-381 Solar Input Power Wiring Diagram 41

SECTION 7 - OWNER OF THE GATE OPERATOR 42

7.1 Alarm Sounding OR “Chirping” and Gate WILL NOT Operate 42
7.2 Manual Gate Operation 43
7.3 Gate Operators Monthly Checkup 44
7.4 New Installation Checklist for Installer and Property Owner 45
Printable Safety Page 47

Swing Gate Requirements

This operator is intended for installation only on gates used for vehicles. Pedestrians must be supplied with a separate access opening. For pedestrian access in the vicinity of an automated vehicular gate, separate pedestrian access shall be provided or available. The pedestrian access shall be in a location such that a pedestrian shall not come in contact with a moving vehicular gate access gate during the entire path of travel of the vehicular gate. A pedestrian gate shall not be incorporated into an automated vehicular gate panel.

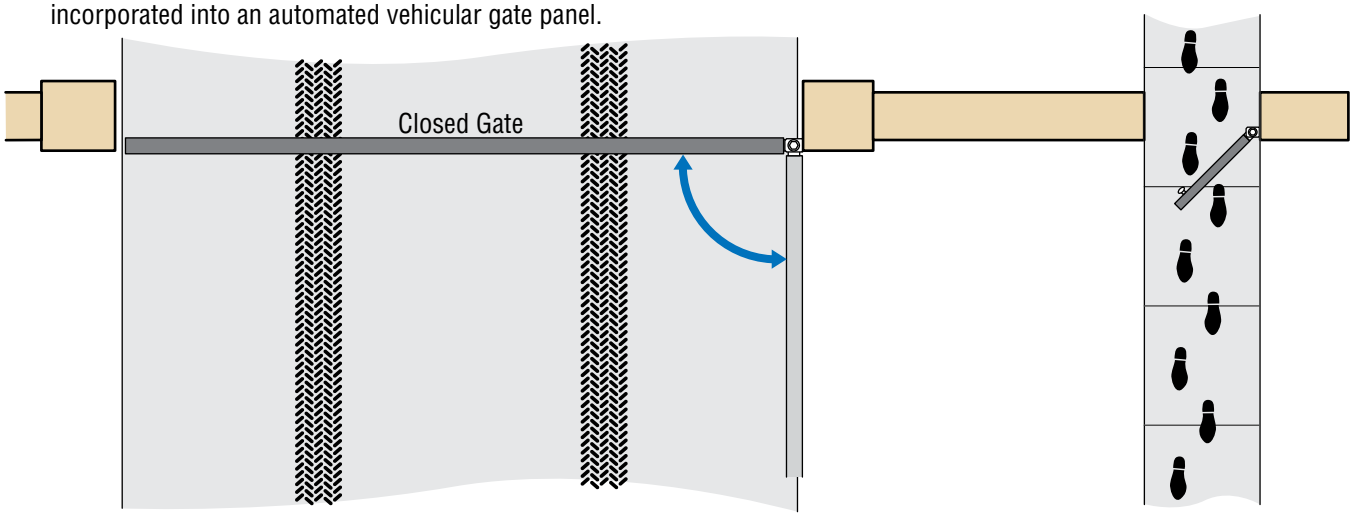

Entrapment Protection must be provided for the gate system where the risk of entrapment or obstruction exists. The operator will NOT run without one or more monitored type B1 or B2 entrapment protection devices in EACH ENTRAPMENT AREA.

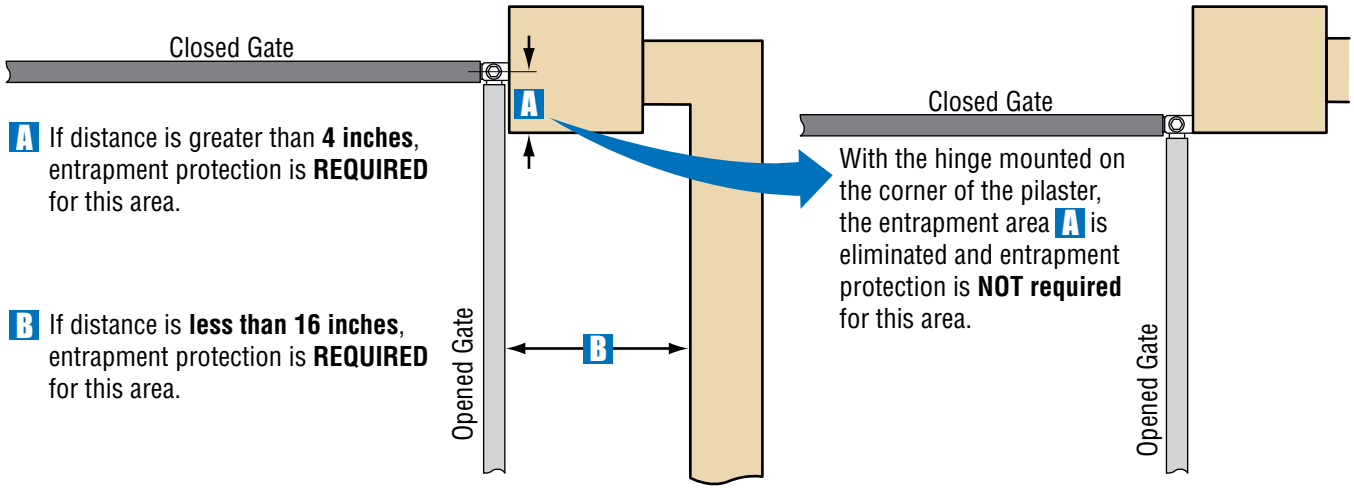

A If distance is greater than **4 inches**, entrapment protection is **REQUIRED** for this area.

B If distance is **less than 16 inches**, entrapment protection is **REQUIRED** for this area.

With the hinge mounted on the corner of the pilaster, the entrapment area **A** is eliminated and entrapment protection is **NOT required** for this area.

C If bottom of gate is **4" to 16"**above the ground at **any** part of the gate's traveling path, entrapment protection is **REQUIRED** for this area.

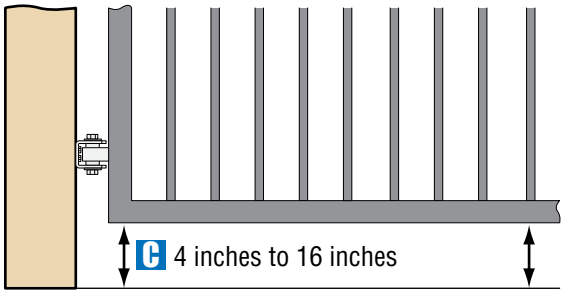

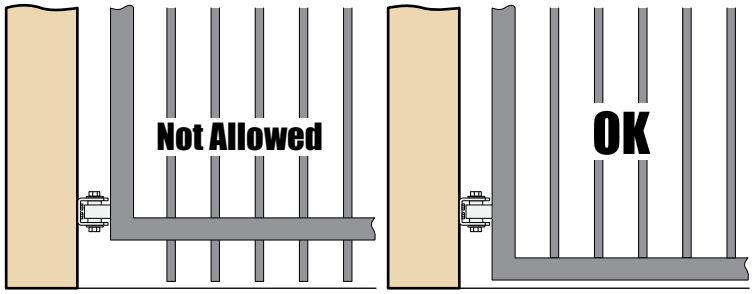

Gates shall have smooth bottom edges, with vertical bottom edged protrusions **NOT** exceeding **0.50 inches**.

Swing Gate Requirements Continued

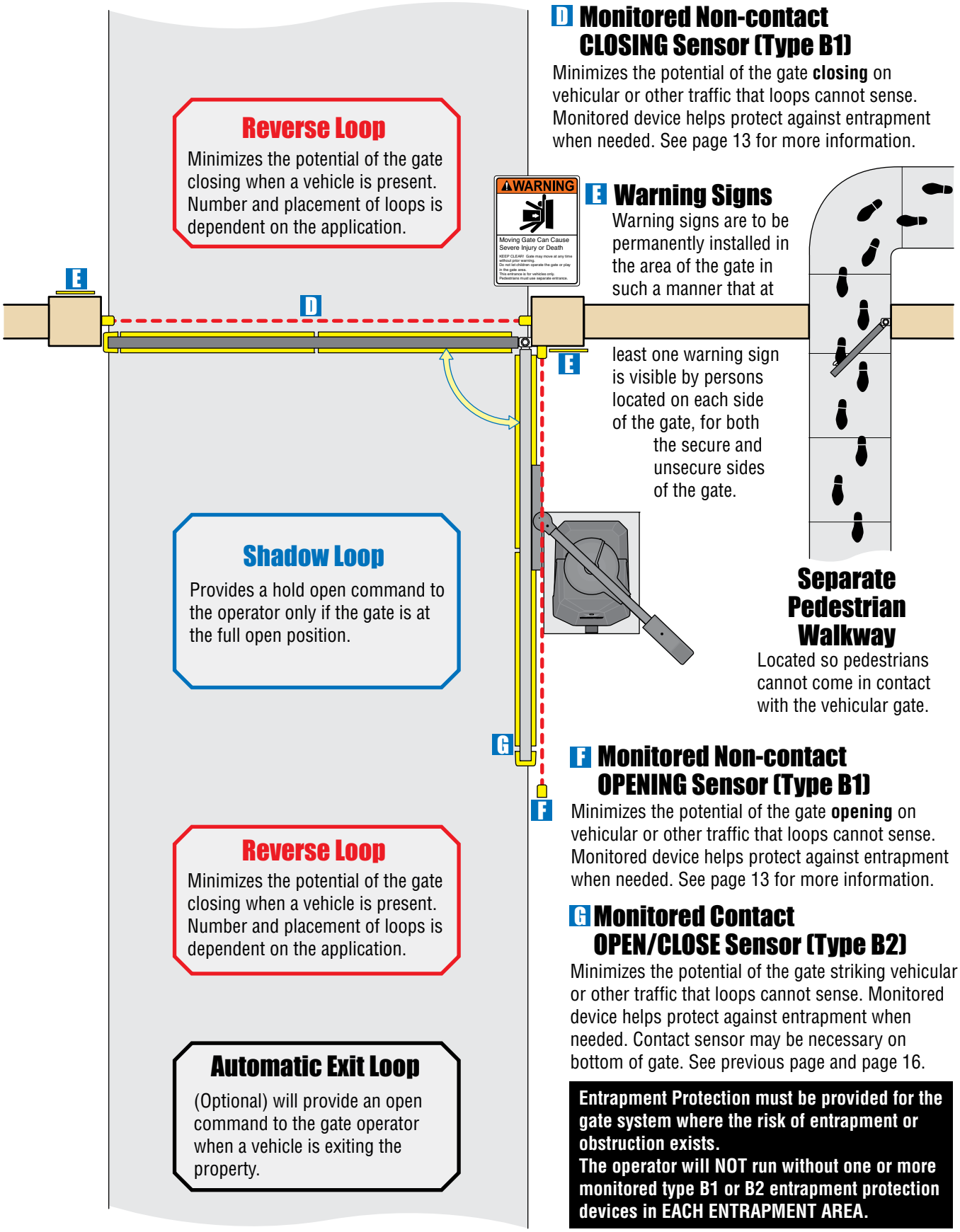

Reverse Loop

Minimizes the potential of the gate closing when a vehicle is present. Number and placement of loops is dependent on the application.

Shadow Loop

Provides a hold open command to the operator only if the gate is at the full open position.

Reverse Loop

Minimizes the potential of the gate closing when a vehicle is present. Number and placement of loops is dependent on the application.

Automatic Exit Loop

(Optional) will provide an open command to the gate operator when a vehicle is exiting the property.

D Monitored Non-contact CLOSING Sensor (Type B1)

Minimizes the potential of the gate **closing** on vehicular or other traffic that loops cannot sense. Monitored device helps protect against entrapment when needed. See page 13 for more information.

E Warning Signs

Warning signs are to be permanently installed in the area of the gate in such a manner that at least one warning sign is visible by persons located on each side of the gate, for both the secure and unsecure sides of the gate.

Separate Pedestrian Walkway

Located so pedestrians cannot come in contact with the vehicular gate.

F Monitored Non-contact OPENING Sensor (Type B1)

Minimizes the potential of the gate **opening** on vehicular or other traffic that loops cannot sense. Monitored device helps protect against entrapment when needed. See page 13 for more information.

G Monitored Contact OPEN/CLOSE Sensor (Type B2)

Minimizes the potential of the gate striking vehicular or other traffic that loops cannot sense. Monitored device helps protect against entrapment when needed. Contact sensor may be necessary on bottom of gate. See previous page and page 16.

Entrapment Protection must be provided for the gate system where the risk of entrapment or obstruction exists.
The operator will NOT run without one or more monitored type B1 or B2 entrapment protection devices in EACH ENTRAPMENT AREA.

ASTM F2200 Standard for Gate Construction

Vehicular gates should be constructed and installed in accordance with ASTM F2200; Standard Specification for Automated Vehicular Gate Construction. For a copy of this standard, contact ASTM directly at 610-832-9585; service@astm.org; or www.astm.org.

Important Safety Instructions

WARNING - To reduce the risk of severe injury or death:

1. READ AND FOLLOW ALL INSTRUCTIONS.
2. Never let children operate or play with gate controls. Keep the remote control away from children.
3. Always keep people and objects away from gate. **NO ONE SHOULD CROSS THE PATH OF THE MOVING GATE.**
4. Test the operator monthly. The gate MUST reverse on contact with a rigid object or stop or reverse when an object activates the non-contact sensors. After adjusting the force or the limit of travel, retest the gate operator. Failure to adjust and retest the gate operator properly can increase the risk of severe injury or death.
5. Use the manual release only when the gate is not moving.
6. KEEP GATES PROPERLY MAINTAINED. Read the owner's manual. Have a qualified service person make repairs to gate hardware.
7. The operator is intended for installation on gates used for vehicles. Pedestrians must be supplied with a separate access opening. The pedestrian access opening shall be designed to promote pedestrian usage. Locate the gate such that persons will not come in contact with the vehicular gate during the entire path of travel of the vehicular gate.
8. **SAVE THESE INSTRUCTIONS!**

Instructions regarding intended installation:

- Install the gate operator only if:
  1. The operator is appropriate for the construction of the gate and the usage class of the gate.
  2. All openings of a horizontal slide gate are guarded or screened from the bottom of the gate to a minimum of 6 feet (1.83 m) above the ground to prevent a 2 ¼ inch (57.2 mm) diameter sphere from passing through the openings anywhere in the gate, and in that portion of the adjacent fence that the gate covers in the open position.
  3. All exposed pinch points are eliminated or guarded.
  4. Guarding is supplied for exposed rollers.
- The operator is intended for installation only on gates used for vehicles. Pedestrians must be supplied with a separate access opening. The pedestrian access opening shall be designed to promote pedestrian usage. Locate the gate such that persons will not come in contact with the vehicular gate during the entire path of travel of the vehicular gate.
- The gate must be installed in a location so that enough clearance is supplied between the gate and adjacent structures when opening and closing to reduce the risk of entrapment. Swinging gates should not open into public access areas.
- The gate must be properly installed and work freely in both directions prior to the installation of the gate operator. Do not over-tighten the operator clutch, pressure relief valve or reduce reversing sensitivity to compensate for a damaged gate.
- For gate operators utilizing Type D protection:
  1. The gate operator controls must be placed so that the user has full view of the gate area when the gate is moving.
  2. A warning placard shall be placed adjacent to the controls.
  3. An automatic closing device (such as a timer, loop sensor, or similar device) shall not be employed.
  4. No other activation device shall be connected.
- Controls intended for user activation must be located at least six feet (6') away from any moving part of the gate and where the user is prevented from reaching over, under, around or through the gate to operate the controls. Outdoor or easily accessible controls should have a security feature to prevent unauthorized use.
- The Stop and/or Reset button must be located in the line-of-sight of the gate. Activation of the reset control shall not cause the operator to start.
- Warning signs are to be permanently installed in the area of the gate in such a manner that at least one warning sign is visible by persons located on each side of the gate, for both the secure and unsecure sides of the gate.
- For gate operators utilizing a non-contact sensor:
  1. See the instructions on the placement of non-contact sensors for each type of application.
  2. Care shall be exercised to reduce the risk of nuisance tripping, such as when a vehicle trips the sensor while the gate is still moving in the opening direction.
  3. One or more non-contact sensors shall be located where the risk of entrapment or obstruction exist, such as the perimeter reachable by a moving gate or barrier.
- For gate operators utilizing contact sensors:
  1. One or more contact sensors shall be located where the risk of entrapment or obstruction exist, such as at the leading edge, trailing edge, and post mounted both inside and outside of a vehicular horizontal slide gate.
  2. One or more contact sensors shall be located at the bottom edge of a vehicular vertical lift gate.
  3. One or more contact sensors shall be located at the pinch point of a vehicular vertical pivot gate.
  4. A hardwired contact sensor shall be located and its wiring arranged so that the communication between the sensor and the gate operator is not subjected to mechanical damage.
  5. A wireless contact sensor such as one that transmits radio frequency (RF) signals to the gate operator for entrapment protection functions shall be located where the transmission of the signals are not obstructed or impeded by building structures, natural landscaping or similar obstructions. A wireless contact sensor shall function under the intended end-use conditions.
  6. One or more contact sensors shall be located at the bottom edge of a vertical barrier (arm).
- Be sure you have instructed the owner of the gate operator about safe and proper operation and testing of the gate operator.

Important Notices

Vehicular gate operator products provide convenience and security. However, gate operators must use high levels of force to move gates and most people underestimate the power of these systems and do not realize the potential hazards associated with an incorrectly designed or installed system.
These hazards may include:

- Pinch points
- Entrapment areas
- Reach through hazards
- Absence of entrapment protection devices
- Improperly located access controls
- Absence of vehicle protection devices
- Absence of controlled pedestrian access

In addition to these potential hazards, automated vehicular gate systems must be installed in accordance with the UL 325 Safety Standard and the ASTM F2200 Construction Standard. Most people are unaware of, or are not familiar with, these standards. If an automated vehicular gate system is not properly designed, installed, used and maintained, severe injuries or death can result. Be sure that the installer has instructed you on the proper operation of the gate and gate operator system.
Be sure that the installer has trained you on proper and safe operation of this gate operating system and about the basic functions of the required reversing systems associated with your gate operating system and how to test them (see section 7). These include reversing loops, inherent reversing system, electric edges, photoelectric cells, or other external devices.

- This Owner's Manual is your property. Keep it in a safe place for future reference.
- Be sure that all access control devices are installed a minimum distance of 6 feet away from the gate and gate operator, or in such a way that a person cannot touch the gate or gate operator while using the device. If access control devices are installed in violation of these restrictions, immediately remove the gate operator from service and contact your installing dealer.

Opening device MUST be mounted a minimum of 6 feet from the gate and NOT accessible through the gate!

- Loops and loop detectors, photo-cells or other equivalent devices must be installed to prevent the gate from closing on vehicular traffic.
- The speed limit for vehicular traffic through the gate area is 5 MPH. Install speed bumps and signs to keep vehicular traffic from speeding through the gate area. Failure to adhere to posted speed limits can result in damage to the gate, gate operator, and to the vehicle.
- Be sure that all persons who will use the gate system are familiar with the proper use of the gate and gate operator and are familiar with the possible hazards associated with the gate system.
- Warning signs are to be permanently installed in the area of the gate in such a manner that at least one warning sign is visible by persons located on each side of the gate, for both the secure and unsecure sides of the gate.
- It is your responsibility to periodically check all entrapment protection devices. If any of these devices are observed to function improperly, remove the operator from service immediately and contact your installing or servicing dealer.
- Follow the recommended maintenance schedule.
- Do not allow children to play in the area of the operator or to play with any gate-operating device.
- To remove the gate operator from service, operate the gate to the full open position and then shut off power to the operator at the service panel.

UL 325 Entrapment Protection

UL 325 Classifications

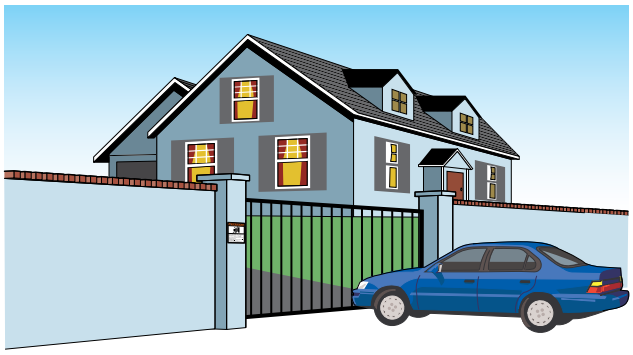

Class I - Residential Vehicular Gate Operator

A vehicular gate operator (or system) intended for use in garages or parking areas associated with a residence of one-to four single families.

Class III - Industrial/Limited Access Vehicular Gate Operator

A vehicular gate operator (or system) intended for use in an industrial location or building such as a factory or loading dock area or other locations not accessible by or intended to service the general public.

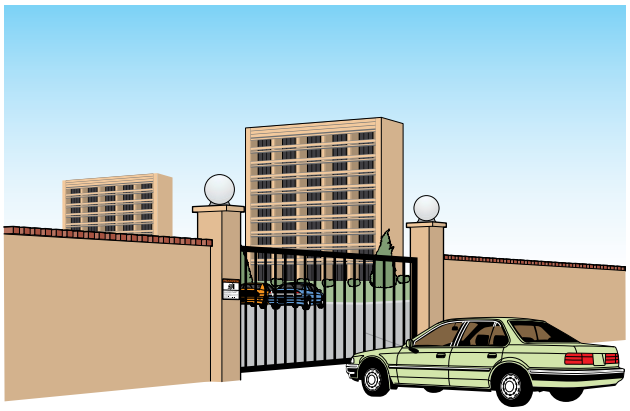

Class II - Commercial/General Access Vehicular Gate Operator

A vehicular gate operator (or system) intended for use in a commercial location or building such as a multi-family housing unit (five or more single family units), hotel, garages, retail store, or other buildings accessible by or servicing the general public.

Class IV - Restricted Access Vehicular Gate Operator

A vehicular gate operator (or system) intended for use in a guarded industrial location or building such as an airport security area or other restricted access locations not servicing the general public, in which unauthorized access is prevented via supervision by security personnel.

Gate Operator Category

	Horizontal Slide, Vertical Lift, Vertical Pivot, Horizontal Bifold	Swing, Vertical Barrier (Arm)
Entrapment Protection Types	A, B1*, B2* or D	**A, B1*, B2*, C or D**

Type A - Inherent entrapment protection system.

Type B1 - Non-contact sensor (photoelectric sensor or the equivalent).

Type B2 - Contact sensor (edge device or equivalent).

Type C - Inherent force limiting, inherent adjustable clutch or inherent pressure relief device.

Type D - Actuating device requiring constant pressure to maintain opening or closing motion of the gate.

* B1 and B2 means of entrapment protection must be MONITORED.

Vertical Barrier Note: Barrier gate operators (arm) that is not intended to move toward a rigid object closer than 16 inches (406 mm) are not required to be provided with a means of entrapment protection.

Glossary

GATE - A moving barrier such as a swinging, sliding, raising, lowering, folding, pivoting, or the like, barrier, that is a stand-alone passage barrier or is that portion of a wall or fence system that controls entrance and/or egress by persons or vehicles and completes the perimeter of a defined area.

RESIDENTIAL VEHICULAR GATE OPERATOR – CLASS I - A vehicular gate operator (or system) intended for use in a home of one-to four single family dwelling, or garage or parking area associated therewith.

COMMERCIAL / GENERAL ACCESS VEHICULAR GATE OPERATOR - CLASS II - A vehicular gate operator (or system) intended for use in a commercial location or building such as a multi-family housing unit (five or more single family units), hotels, garages, retail store, or other building servicing the general public.

INDUSTRIAL / LIMITED ACCESS VEHICULAR GATE OPERATOR - CLASS III - A vehicular gate operator (or system) intended for use in an industrial location or building such as a factory or loading dock area or other locations not intended to service the general public.

RESTRICTED ACCESS VEHICULAR GATE OPERATOR - CLASS IV - A vehicular gate operator (or system) intended for use in a guarded industrial location or building such as an airport security area or other restricted access locations not servicing the general public, in which unauthorized access is prevented via supervision by security personnel.

VEHICULAR BARRIER (ARM) OPERATOR (OR SYSTEM) - An operator (or system) that controls a cantilever type device (or system), consisting of a mechanical arm or barrier that moves in a vertical arc, intended for vehicular traffic flow at entrances or exits to areas such as parking garages, lots or toll areas.

VEHICULAR HORIZONTAL SLIDE-GATE OPERATOR (OR SYSTEM) - A vehicular gate operator (or system) that controls a gate which slides in a horizontal direction that is intended for use for vehicular entrance and exit to a drive, parking lot, or the like.

VEHICULAR SWING-GATE OPERATOR (OR SYSTEM) - A vehicular gate operator (or system) that controls a gate which moves in an arc in a horizontal plane that is intended for use for vehicular entrance and exit to a drive, parking lot, or the like.

SYSTEM - In the context of these requirements, a system refers to a group of interacting devices intended to perform a common function.

WIRED CONTROL - A control implemented in a form of fixed physical interconnections between the control, the associated devices, and an operator to perform predetermined functions in response to input signals.

WIRELESS CONTROL - A control implemented in means other than fixed physical interconnections (such as radio waves or infrared beams) between the control, the associated devices, and an operator to perform predetermined functions in response to input signals.

INHERENT ENTRAPMENT PROTECTION SYSTEM - A system, examples being a motor current or speed sensing system, which provides protection against entrapment upon sensing an object and is incorporated as a permanent and integral part of the operator.

EXTERNAL ENTRAPMENT PROTECTION DEVICE - A device, examples being an edge sensor, a photoelectric sensor, or similar entrapment protection device, which provides protection against entrapment when activated and is not incorporated as a permanent part of an operator.

ENTRAPMENT - The condition when a person is caught or held in a position that increases the risk of injury.

SECTION 1 - INSTALLATION

Prior to beginning the installation of the swing gate operator, we suggest that you become familiar with the instructions, illustrations, and wiring guide-lines in this manual. This will help insure that your installation is performed in an efficient and professional manner compliant with UL 325 safety and ASTM F2200 construction standards.

The proper installation of the vehicular swing gate operator is an extremely important and integral part of the overall access control system. Check all local building ordinances and building codes prior to installing this operator. Be sure your installation is in compliance with local codes.

1.1 Underground Conduit Requirements

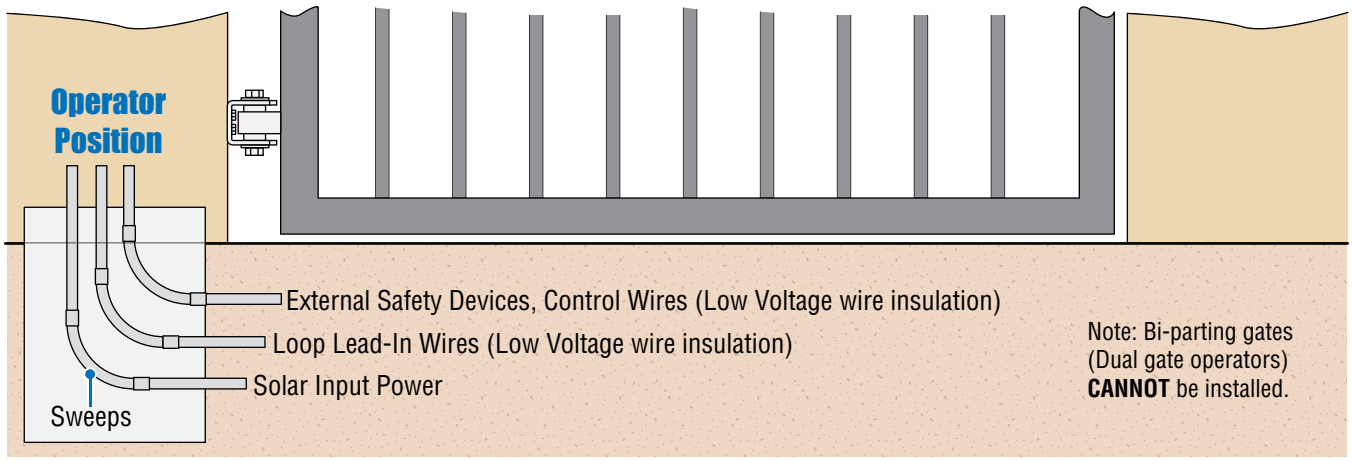

- The conduit requirements are for a typical slide gate operator installation. **The conduit requirements for your application may vary from this depending on your specific needs.**
- Use only sweeps for conduit bends. Do not use 90° elbows as this will make wire pulls very difficult and can cause damage to wire insulation. DoorKing recommends using 3/4-inch conduit.

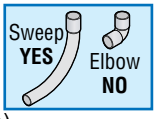

- Installation of **External Entrapment Protection** is **REQUIRED** (photo sensor and/or reversing edge).
- Be sure that all conduits are installed in accordance with local codes.
- **Never** run low voltage rated wire insulation in the same conduit as high voltage rated wire insulation.

1.2 Concrete Pad

Operator and Conduit Location

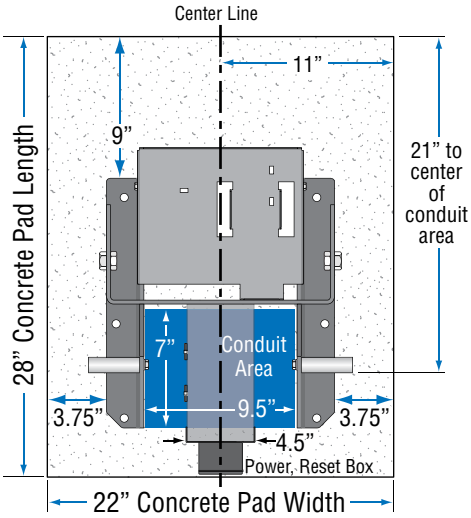

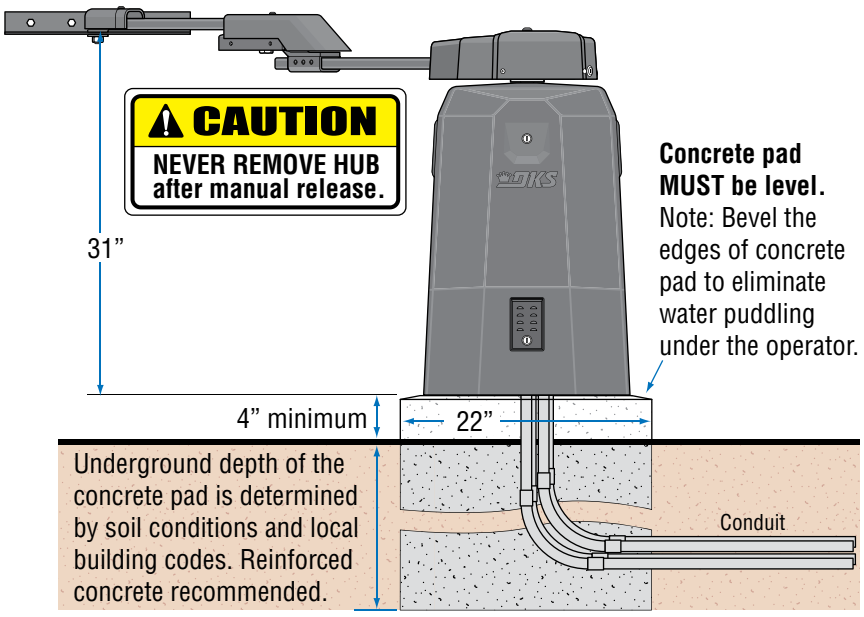

1.3 Installation Layouts

48" Gate Attachment Point - Gates up to 22 Ft.

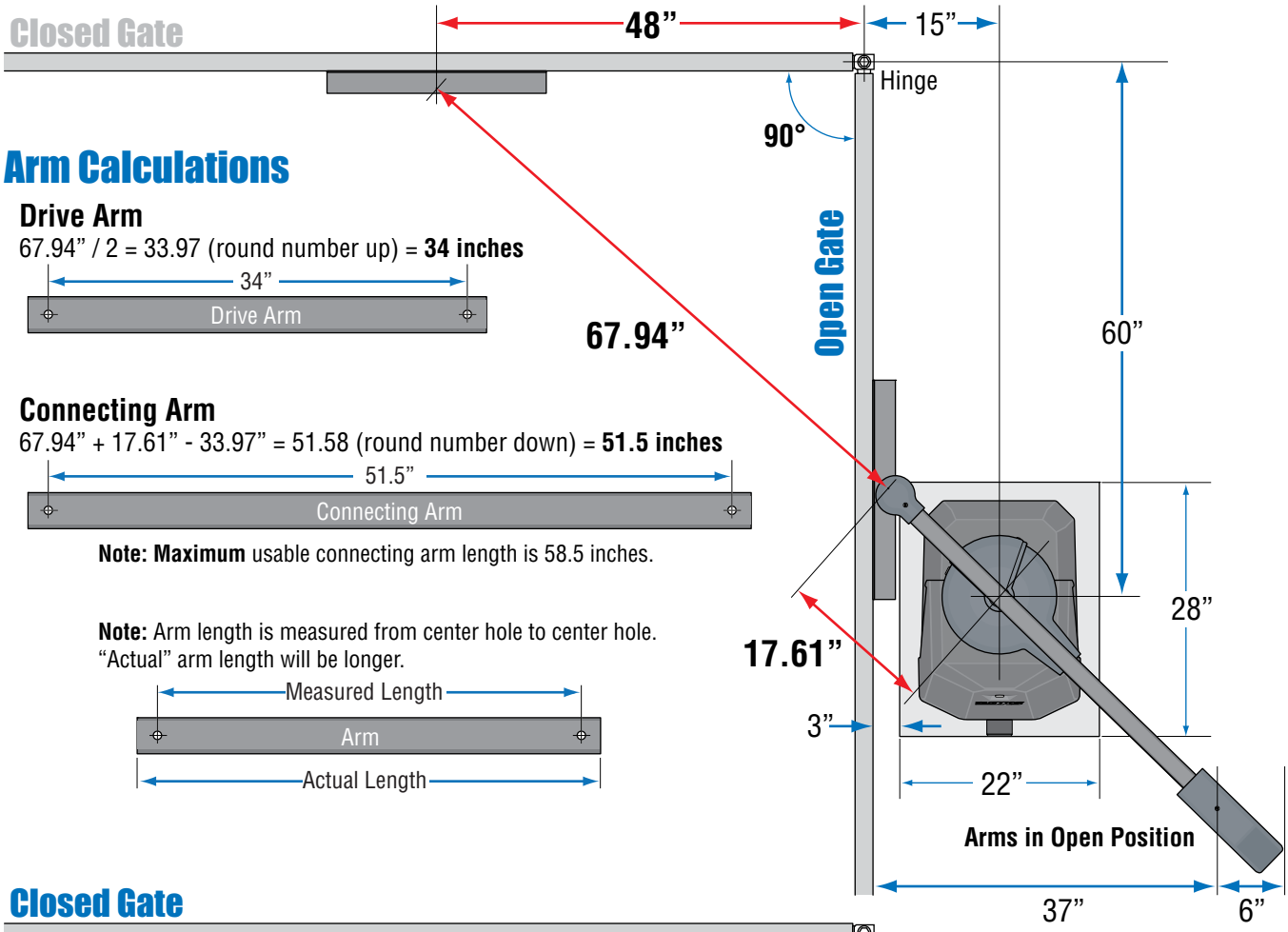

Arm Calculations

Drive Arm

67.94” / 2 = 33.97 (round number up) = **34 inches**

Connecting Arm

67.94” + 17.61” - 33.97” = 51.58 (round number down) = **51.5 inches**

Note: Maximum usable connecting arm length is 58.5 inches.

Note: Arm length is measured from center hole to center hole. “Actual” arm length will be longer.

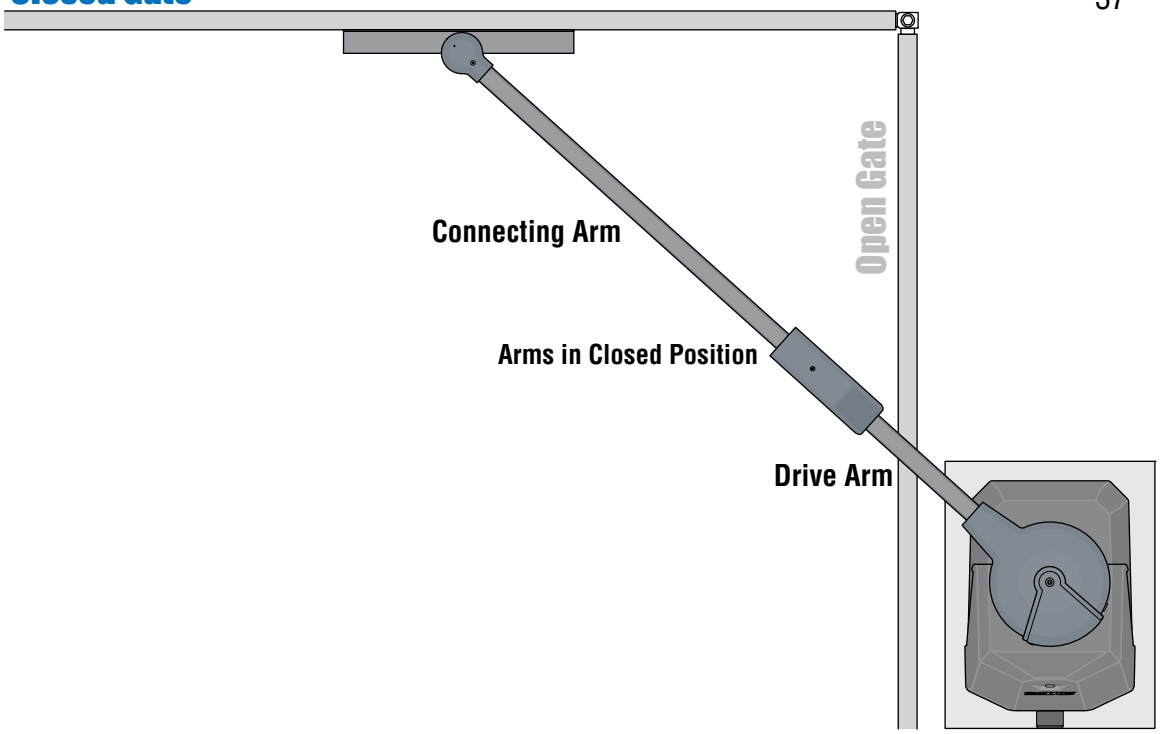

46" Gate Attachment Point - Gates up to 18 Ft.

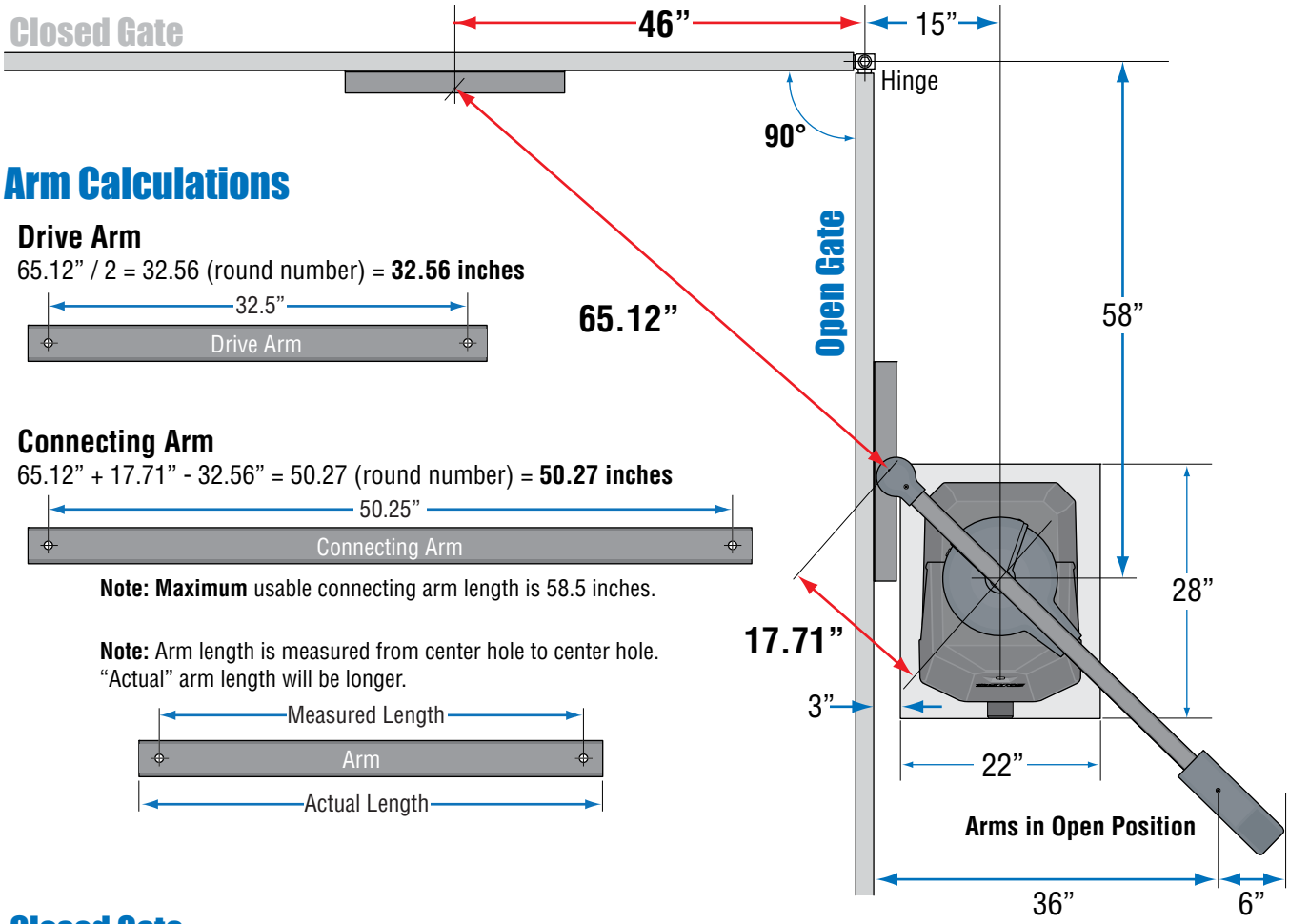

Arm Calculations

Drive Arm

65.12” / 2 = 32.56 (round number) = **32.56 inches**

Connecting Arm

65.12” + 17.71” - 32.56” = 50.27 (round number) = **50.27 inches**

Note: Maximum usable connecting arm length is 58.5 inches.

Note: Arm length is measured from center hole to center hole. “Actual” arm length will be longer.

Closed Gate

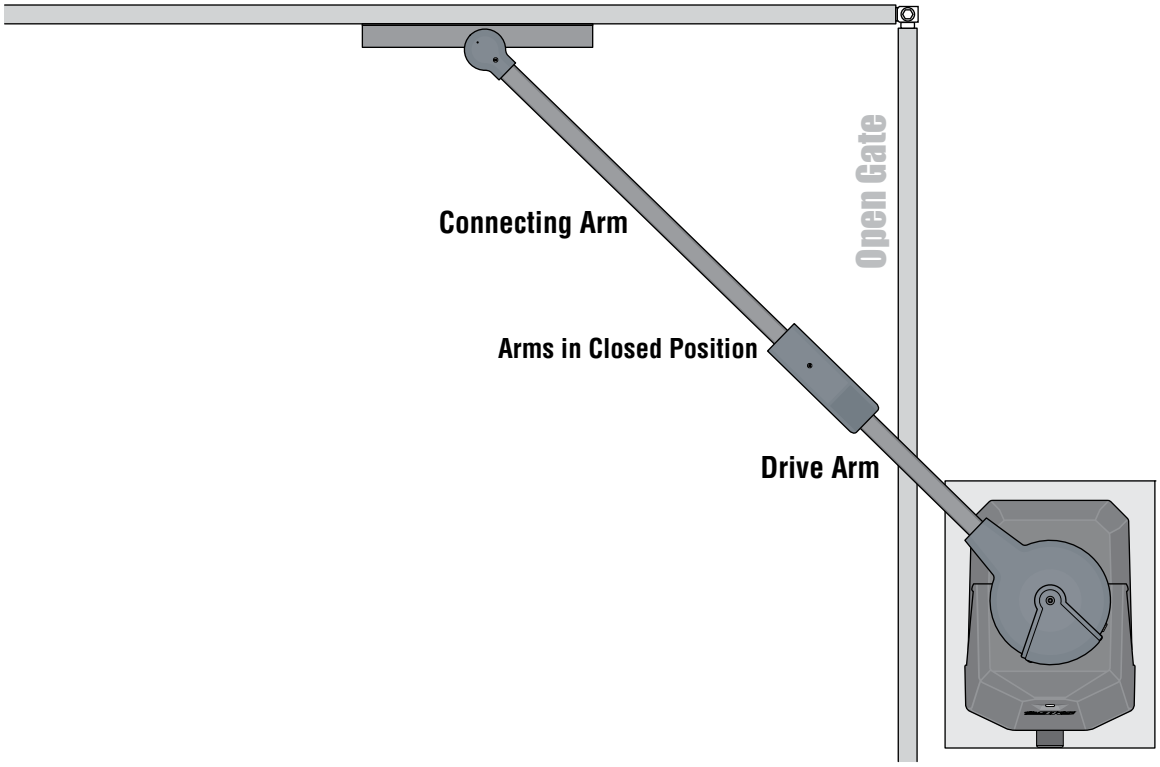

36" Gate Attachment Point - Gates up to 14 Ft.

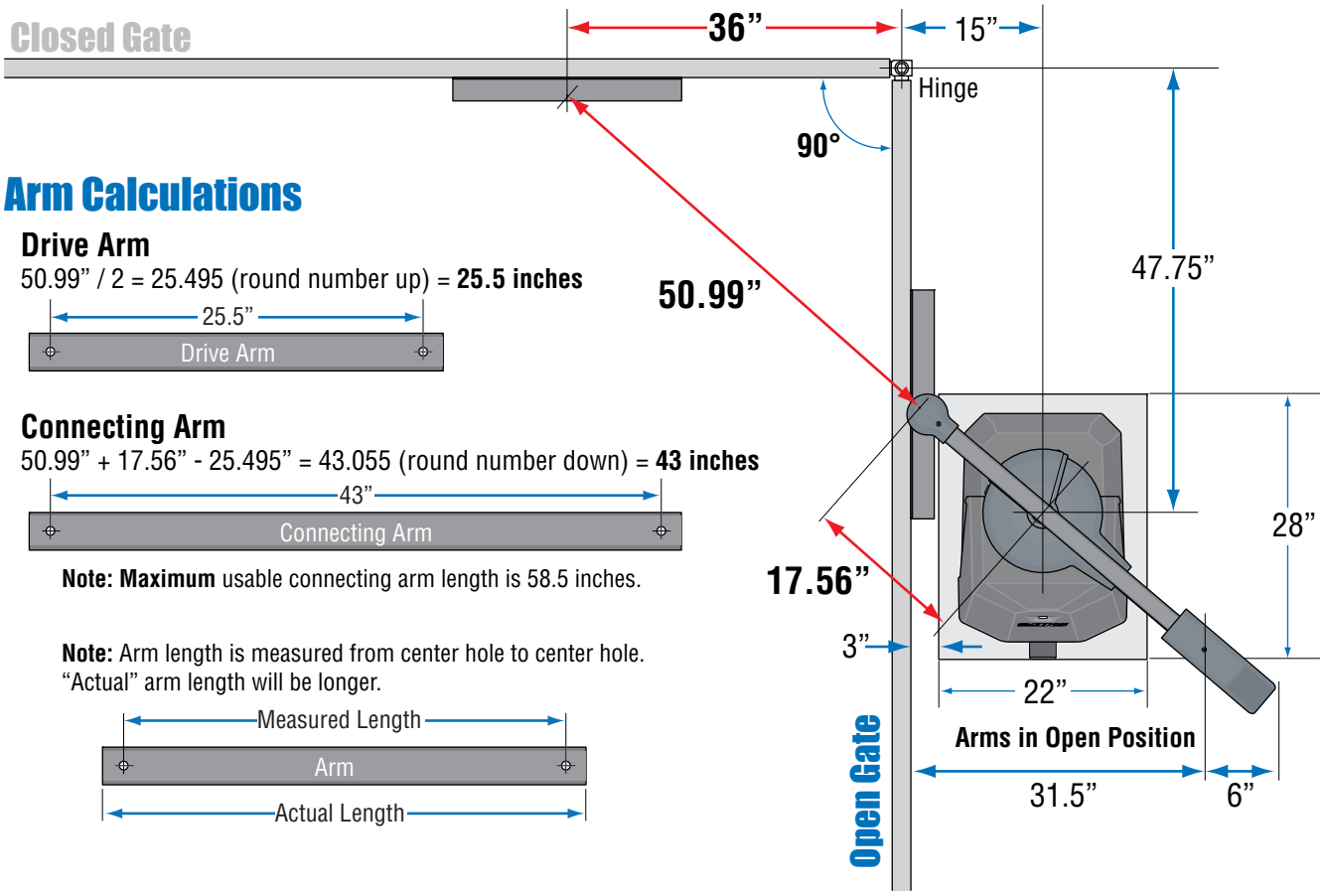

Arm Calculations

Drive Arm

50.99” / 2 = 25.495 (round number up) = **25.5 inches**

Connecting Arm

50.99” + 17.56” - 25.495” = 43.055 (round number down) = **43 inches**

Note: Maximum usable connecting arm length is 58.5 inches.

Note: Arm length is measured from center hole to center hole. “Actual” arm length will be longer.

Closed Gate

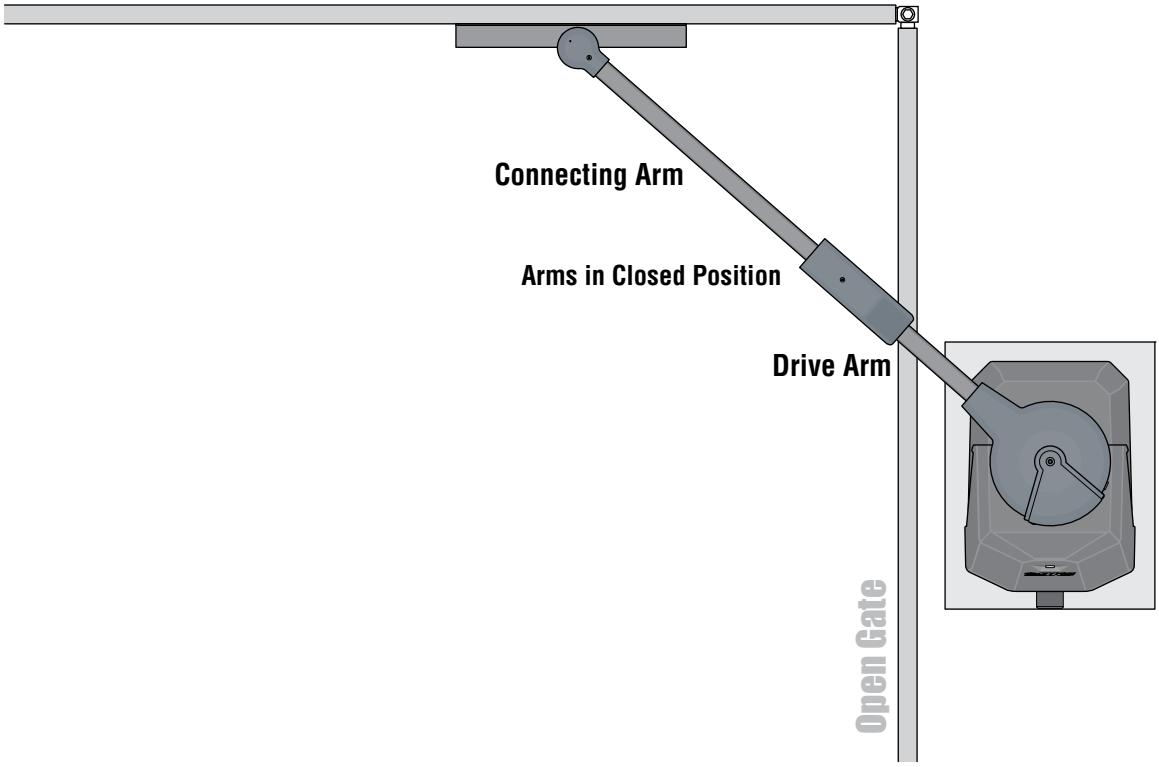

28" Gate Attachment Point - Gates up to 8 Ft.

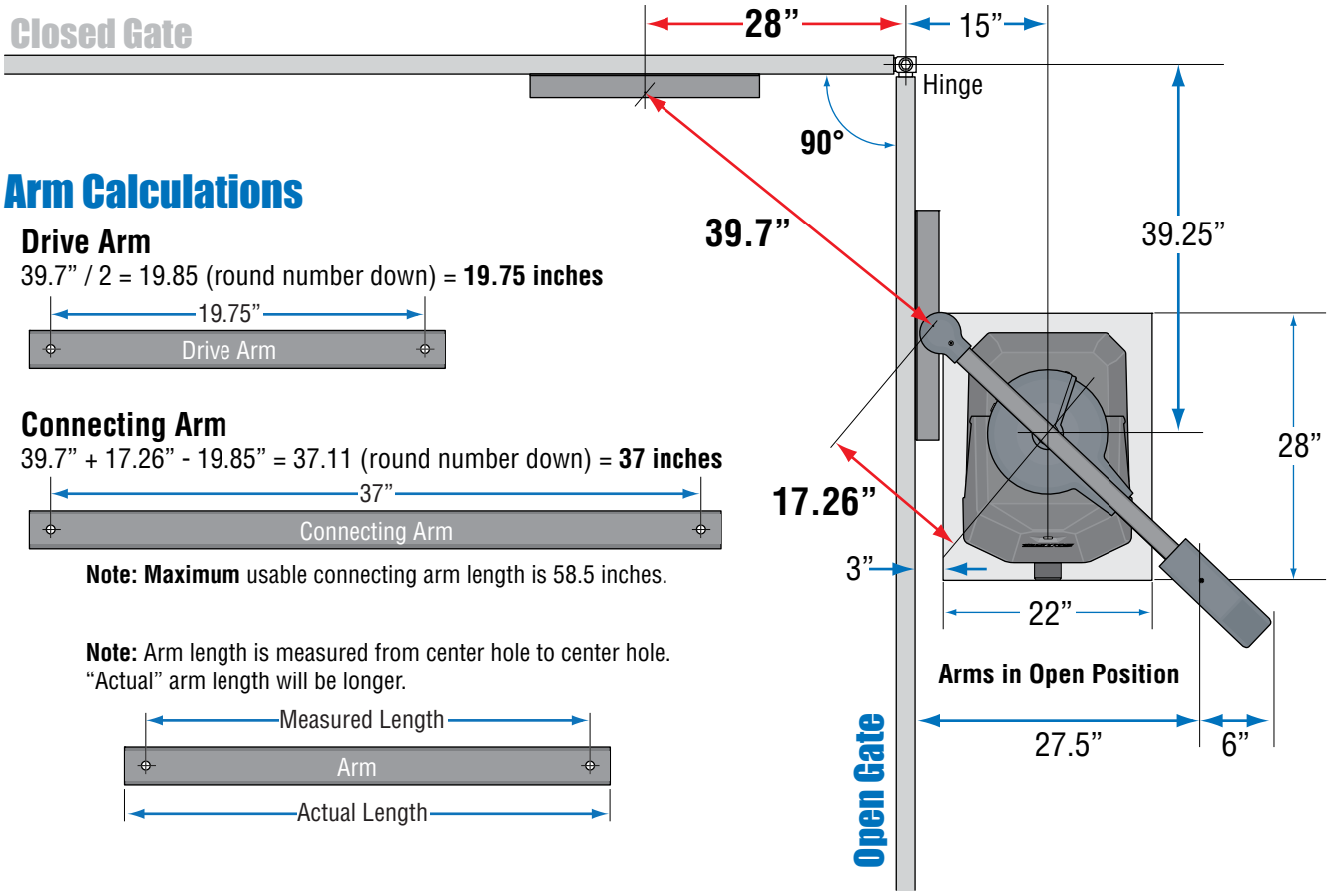

Arm Calculations

Drive Arm

39.7” / 2 = 19.85 (round number down) = **19.75 inches**

Connecting Arm

39.7” + 17.26” - 19.85” = 37.11 (round number down) = **37 inches**

Note: Maximum usable connecting arm length is 58.5 inches.

Note: Arm length is measured from center hole to center hole. “Actual” arm length will be longer.

Closed Gate

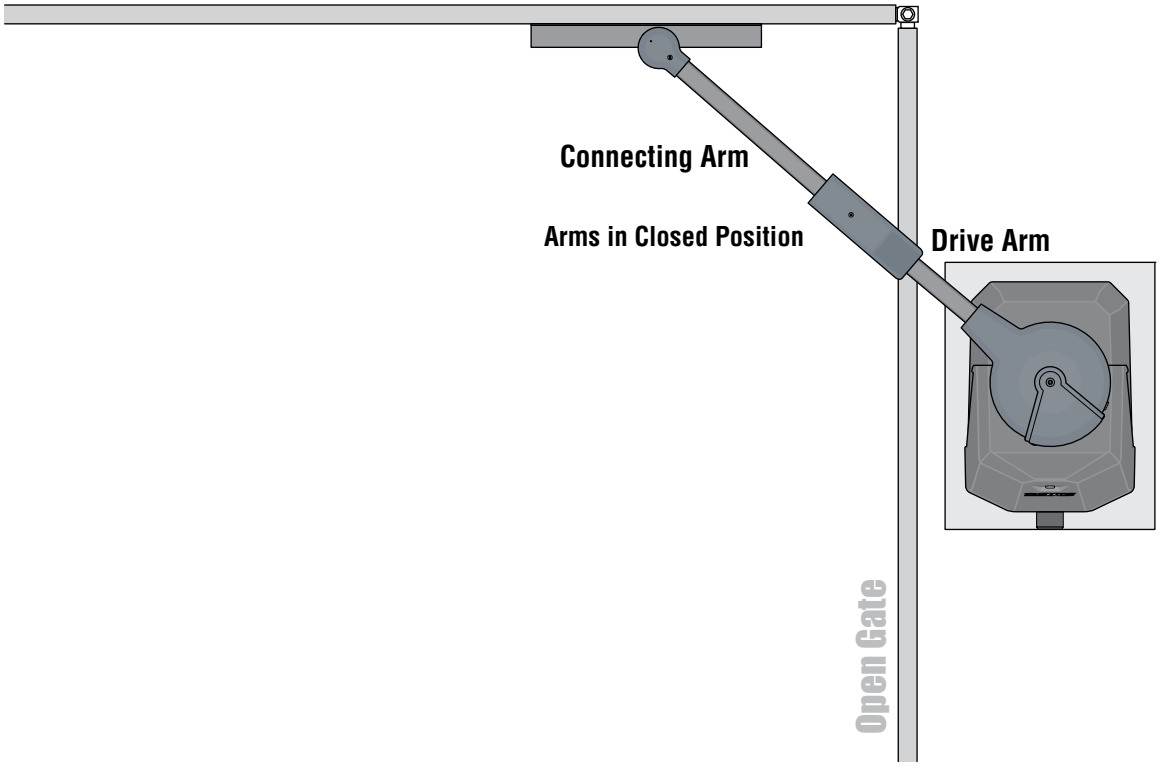

1.4 Securing Operator to Pad

Permanently attach the operator to the concrete pad using six (6) 3/8” x 3” sleeve anchors (not supplied).

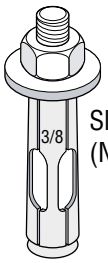

Sleeve Anchor
(Not supplied)

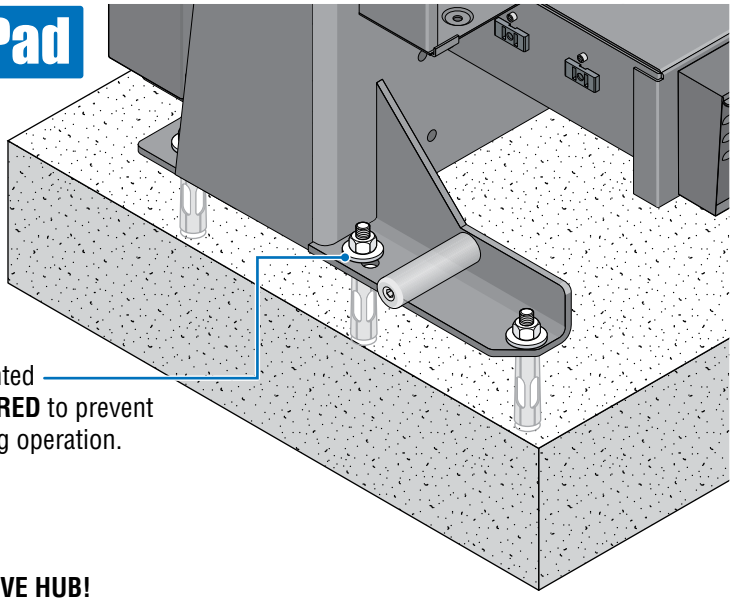

IMPORTANT: Center mounted sleeve anchors are **REQUIRED** to prevent chassis from flexing during operation.

1.5 Attach Gate Bracket

- **A** Release hub with release tool. **DO NOT REMOVE HUB!**
- **B** Bolt crank arm to operator.
- **C** Slide elbow assembly on crank arm.
- **D** Bolt control arm to gate bracket.
- **E** Slide control arm into elbow assembly. **KEEP ARM ASSEMBLY LEVEL**.
- **F** Bolt gate bracket to gate.

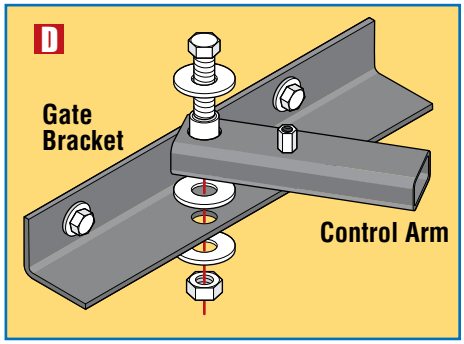

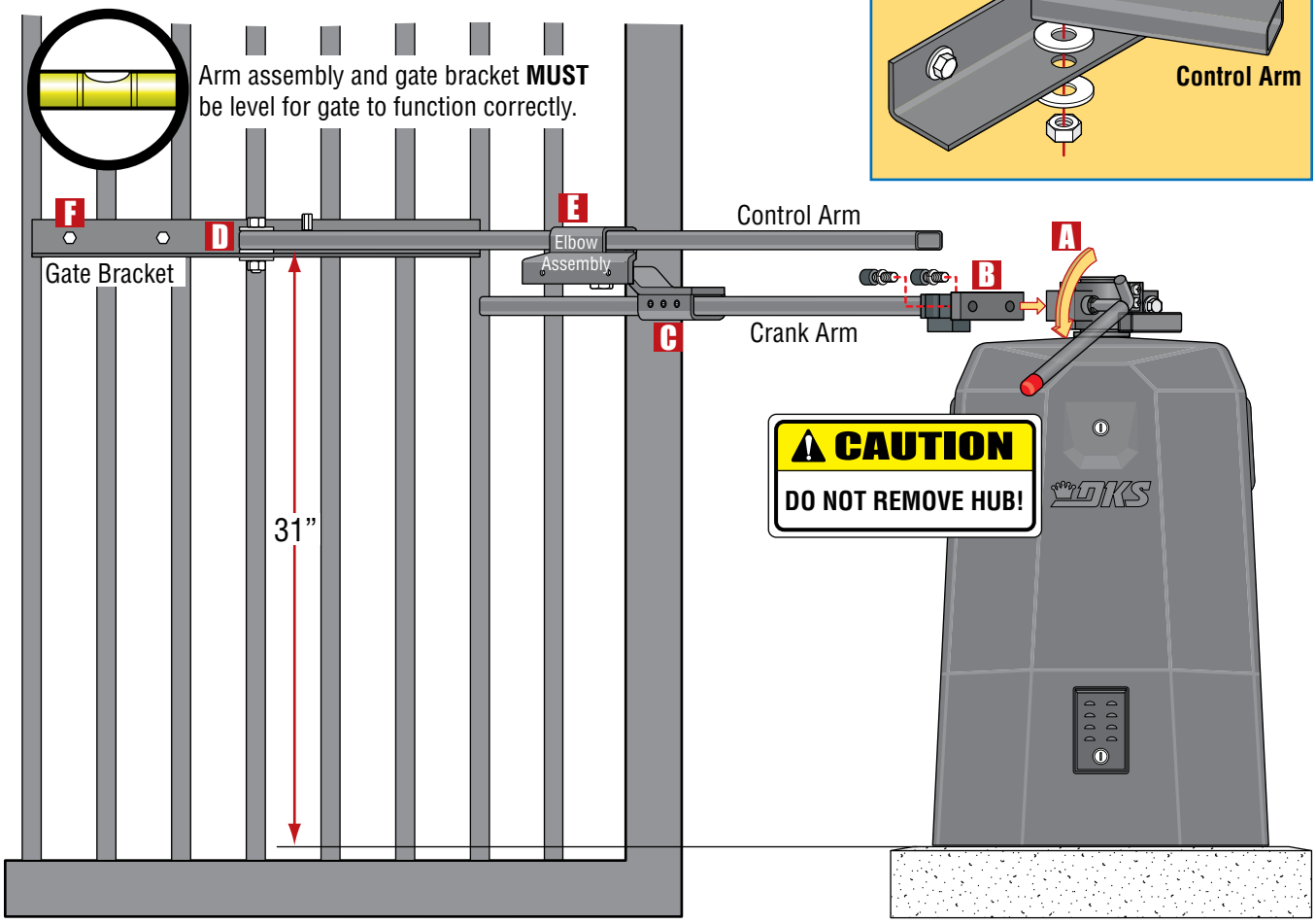

1.6 Determining Arm Lengths

Slide elbow assembly back and fourth, manually opening and closing gate until satisfied with the gate's 90° open and fully closed positions.

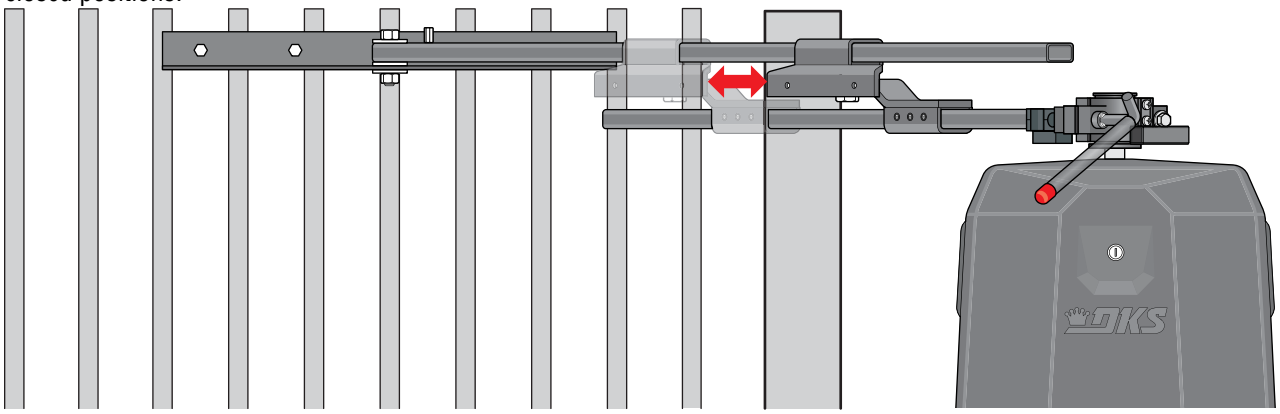

Mark and cut off excess arms. Secure arms to elbow assembly with 6 allen screws. Tighten hub and replace release tool. Install safety covers.

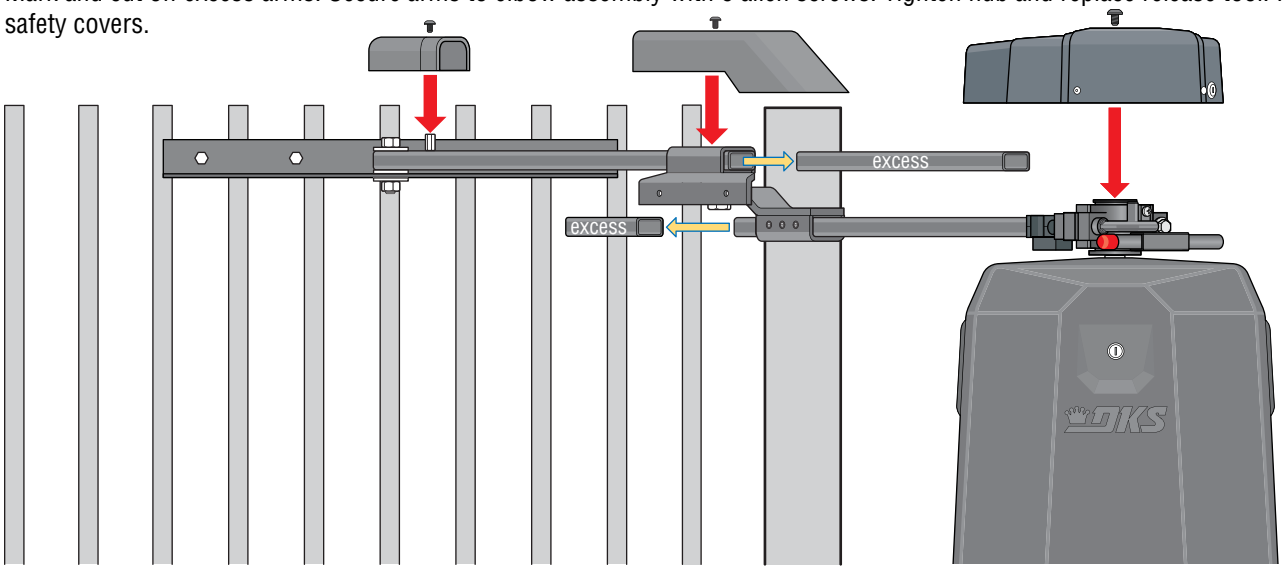

1.7 Installation of Warning Signs

This DoorKing Slide Gate Operator is shipped with two warning signs. The purpose of the warning sign is to alert uninformed persons, and to remind persons familiar with the gate system, that a possible hazard exists so that appropriate action can be taken to avoid the hazard or to reduce exposure to the hazard. See page 3 for suggested mounting positions of signs.

- **Warning signs are to be permanently installed in the area of the gate in such a manner that at least one warning sign is visible by persons located on each side of the gate, for both the secure and unsecure sides of the gate.**
- Use appropriate hardware such as wood or sheet metal screws (not supplied) to install the warning signs.

1.8 Entrapment Protection Installation

External Entrapment Protection Devices:

In addition to the inherent reversing sensor system, this operator has a UL 325 terminal for the connection of **photo sensors**-Type B1 and/or **reversing edges**-Type B2 entrapment protection required by UL 325 standards. **Entrapment Protection must be provided for the gate system where the risk of entrapment or obstruction exists. The operator will NOT run without one or more monitored type B1 or B2 external entrapment protection devices installed in each entrapment area.** Install these devices where the risk of entrapment or a safety hazard exists, examples of which are shown below and next page. Installations can vary.

Typical UL Photo Sensor mounting height and distance away from gate.

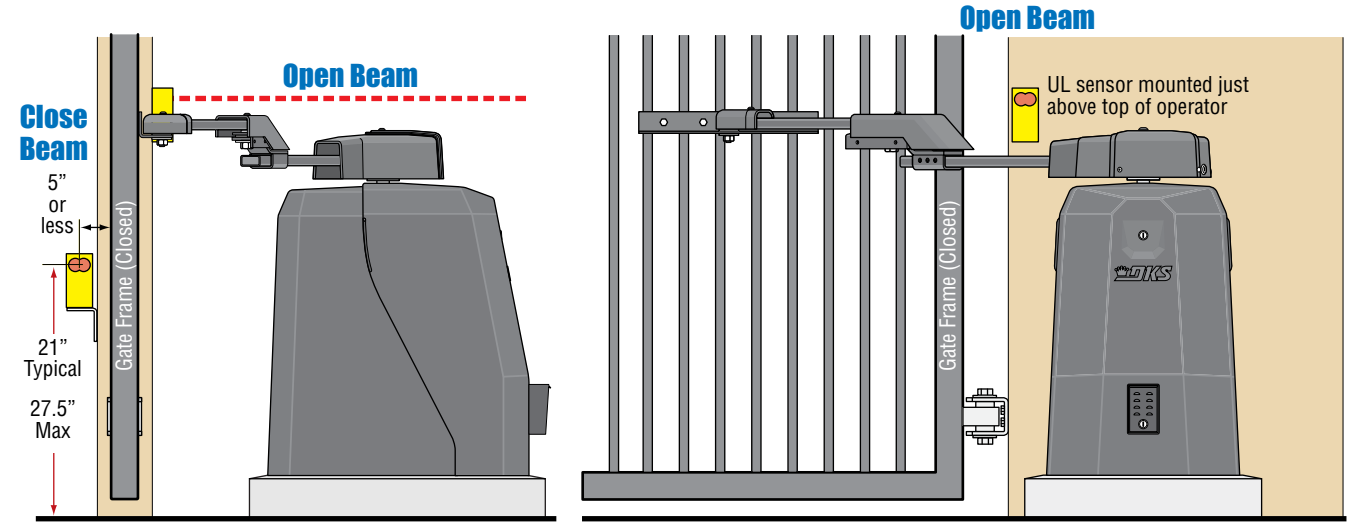

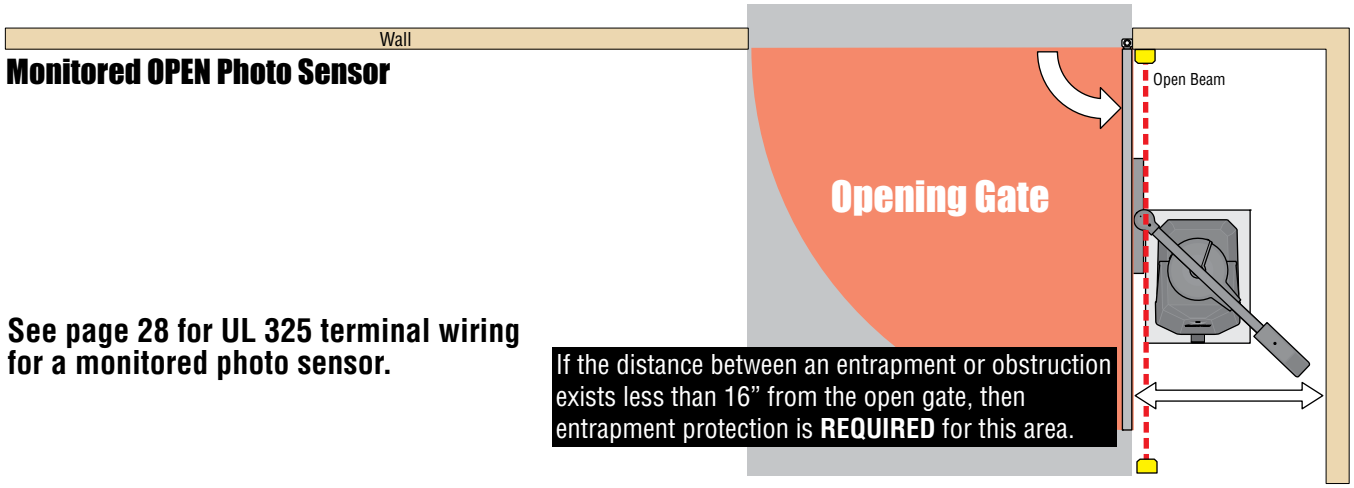

See page 28 for UL 325 terminal wiring for a monitored photo sensor.

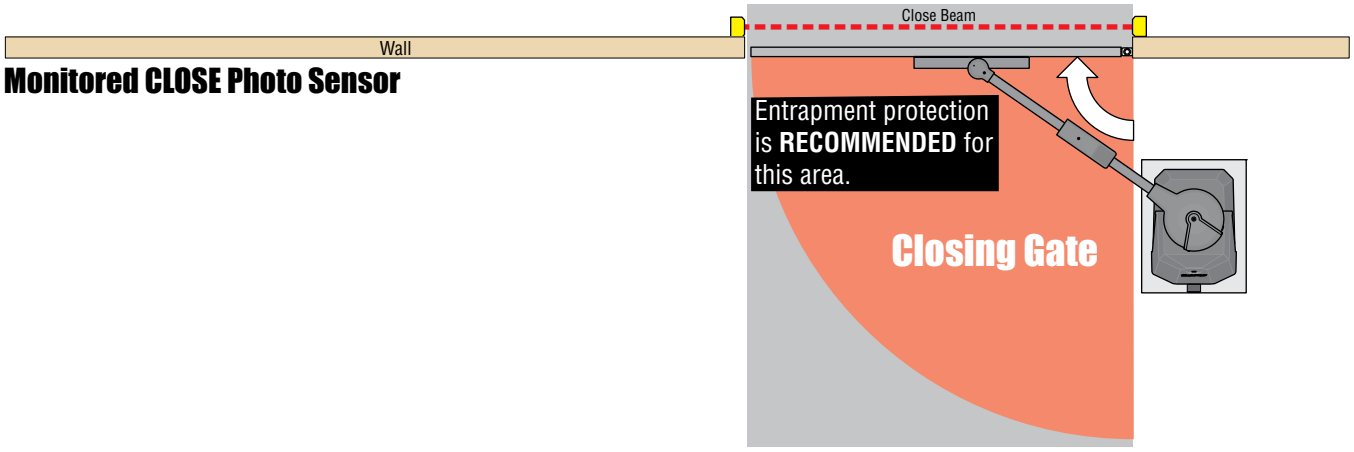

1.8 Continued

A monitored reversing edge (Type B2) or a monitored photo sensor (Type B1, see previous page) **MUST** be installed in **EACH** entrapment area or operator **WILL NOT** function.

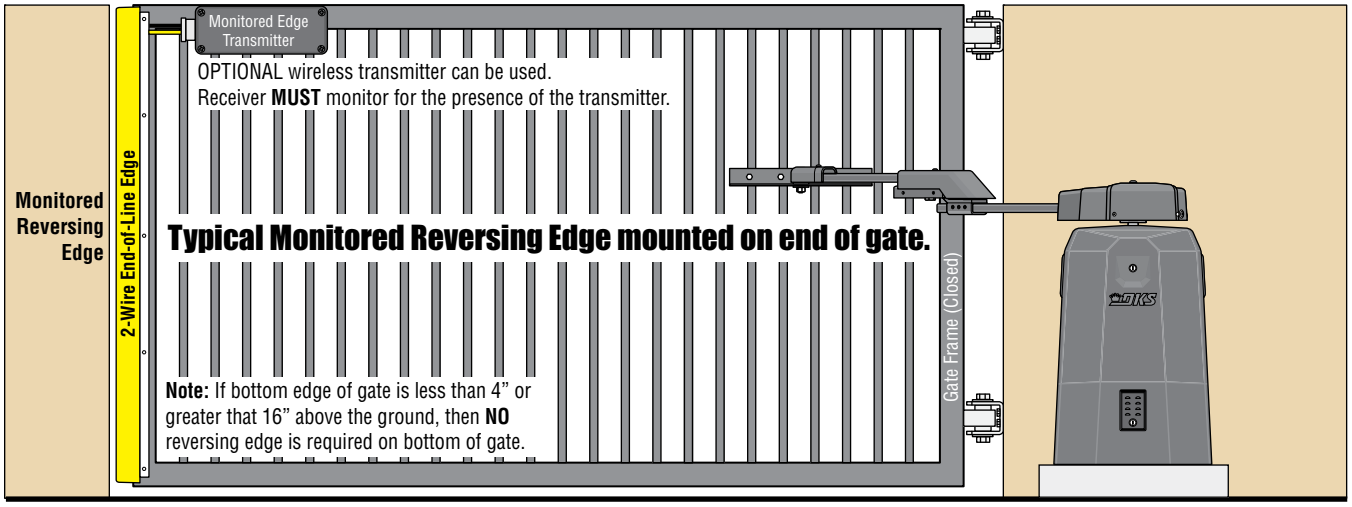

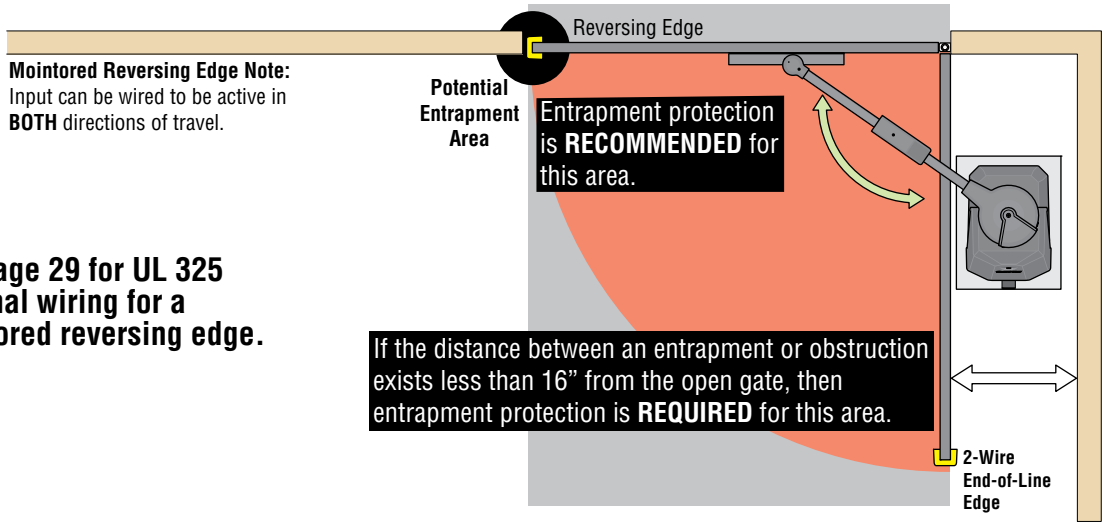

See page 29 for UL 325 terminal wiring for a monitored reversing edge.

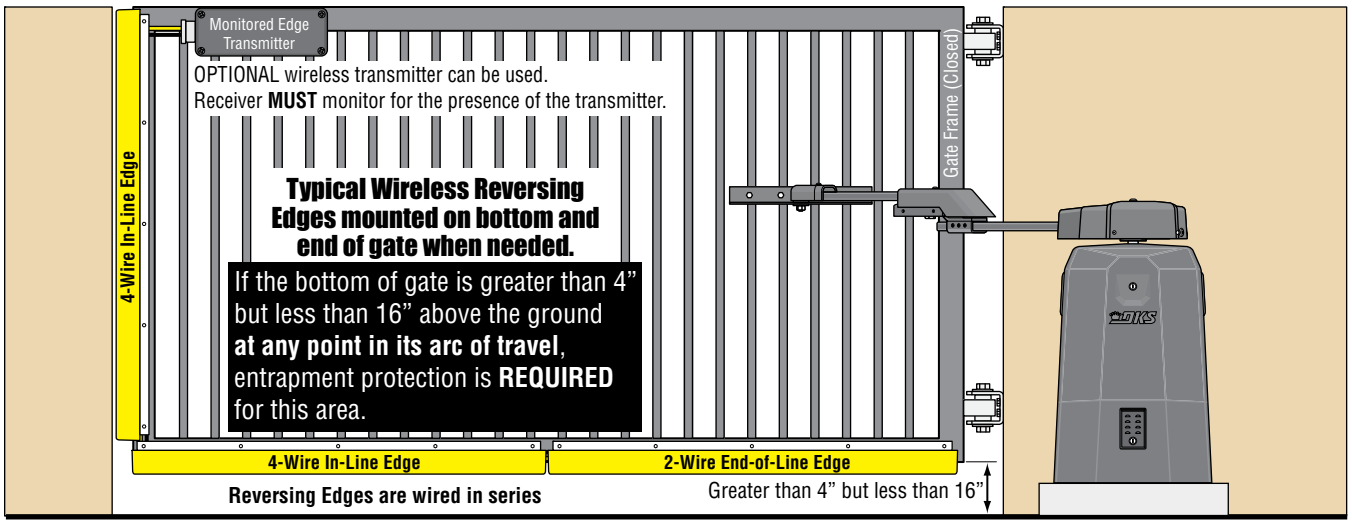

1.9 Concerns BEFORE Solar Panel Installation

Correct positioning of the solar panel will determine the efficiency of the system. In general, the panel should be facing **TRUE SOUTH** at a specific **TILT ANGLE** towards the sun using the information provided on the next page to achieve the highest efficiency. Some re-adjustment of the panel might be necessary to over time to "Fine Tune" the systems efficiency. The solar panel should be installed as close as possible to the operator in an area free and clear of **ALL** obstructions and shadows during the **ENTIRE** day. Generally, If the solar panel does **NOT** cast a shadow by the sun, the batteries are **NOT** being charged.

- **Trees / Buildings** that do not block the solar panel from direct sunlight in the summer, **could** block the panel during the winter. The sun's path across the sky is lower during the winter than in the summer. The shadows that do not obstruct the solar panel during the summer months, will cast longer shadows in the winter, which could block the panel then.
- **Wind** can exert extreme pressure on the solar panel and support post. Make sure they are securely fastened.
- **Dust** can accumulate on the panel over time. Cleaning the panel every so often is necessary to keep the system operating at its highest efficiency.
- **Snow** may cover the panel during the winter. You may want to re-adjust the panel to a steeper angle to allow the snow to slide off. Even then, the panel may still accumulate snow and need to be manually cleaned off when necessary to keep the system functioning.

Mounting Recommendations

The solar panel will perform **MOST** efficient when installed as close as possible to the operator (Within a couple of feet). Keep in mind, the efficiency of the solar panel will diminish the farther away the panel is installed from the operator.

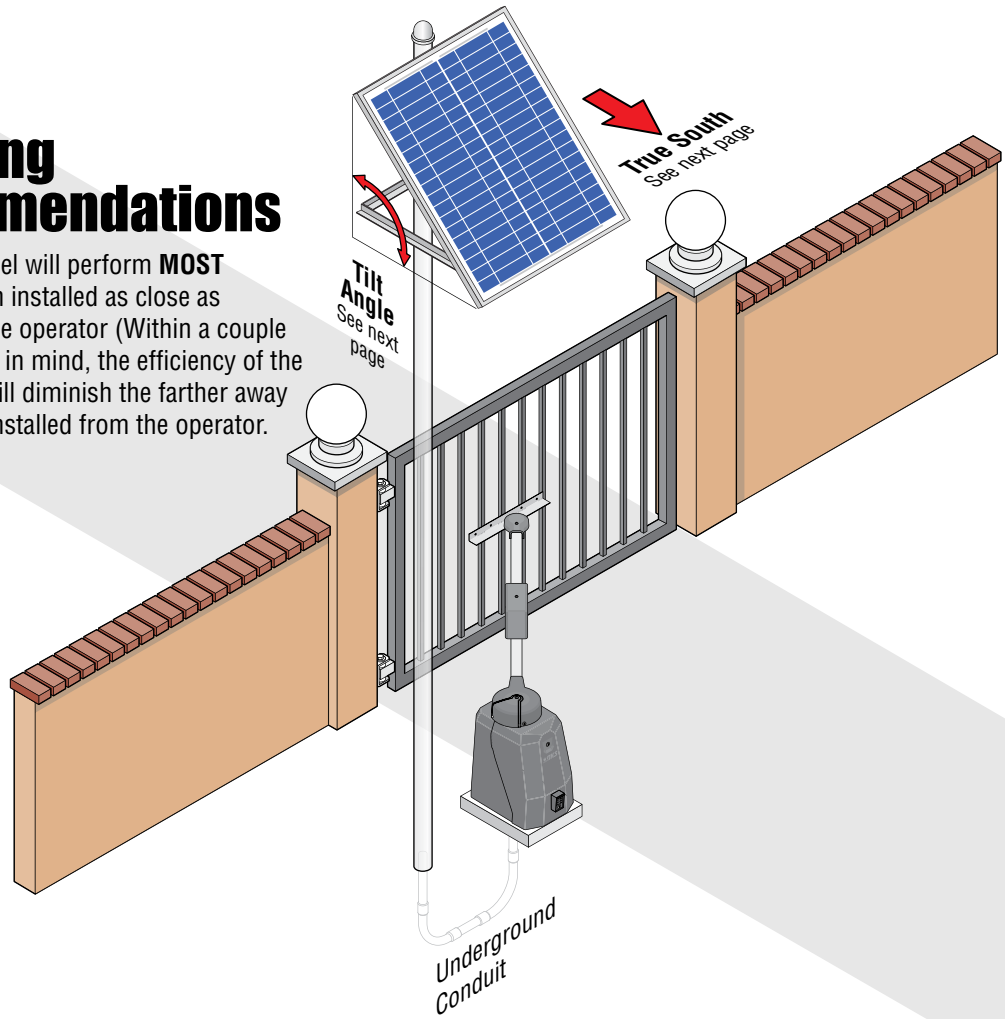

OPTIONAL DKS Solar Power Kit P/N 2000-070.
If other solar sources are used, **output MUST be 24 VDC.**

1.10 Solar Panel Positioning

These charts should be used only for estimates. Solar systems can vary from this information. These maps do not take into account small climate changes and may not be 100% accurate for all locations.

Solar Panel MUST Point "TRUE SOUTH"

It is important for proper system operation that the solar panel is oriented to **TRUE SOUTH**. The directions of magnetic South and TRUE South differ from one another depending on geographic location. The map below shows the difference between magnetic south and TRUE south for your area.

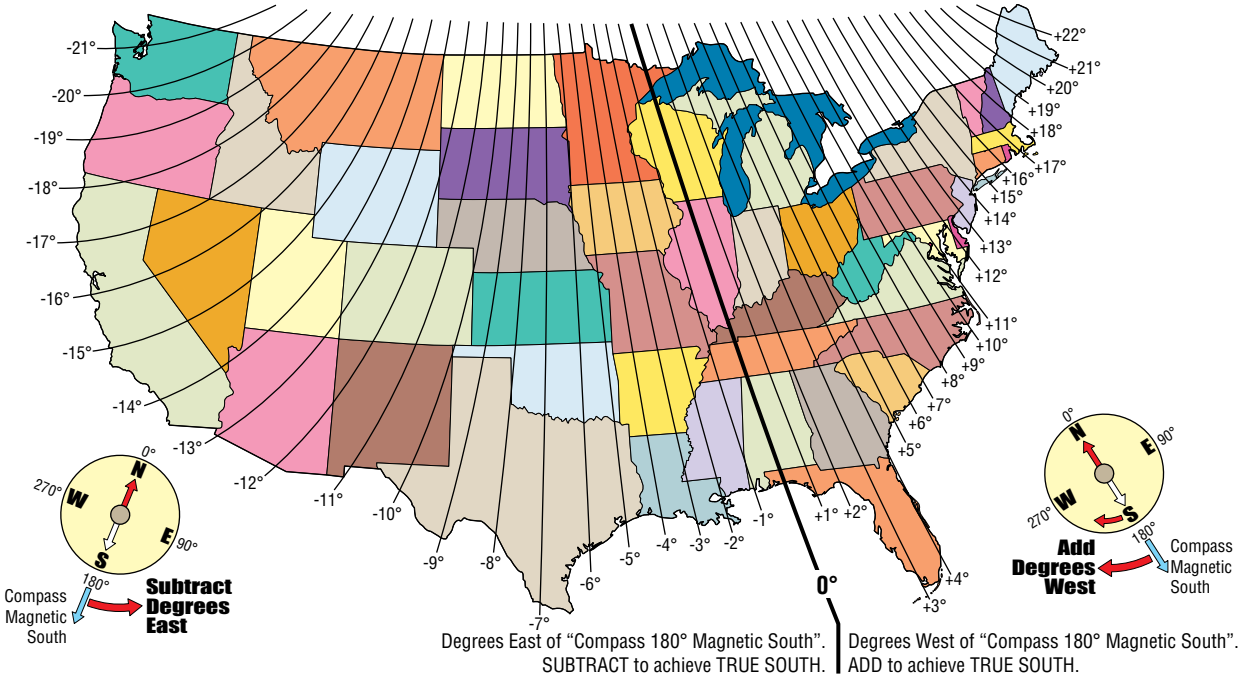

General Solar Panel "Tilt Angle"

It is simplest to mount the solar panel at a fixed tilt angle and leave it (Shown on chart below). To capture more energy from the sun, you can adjust the tilt angle of the solar panel twice a year (At the beginning of summer and winter). Add approximately 6° in the summer and subtract approximately 6° in the winter from your "general" tilt angle on this chart. Your tilt angle may vary from this.

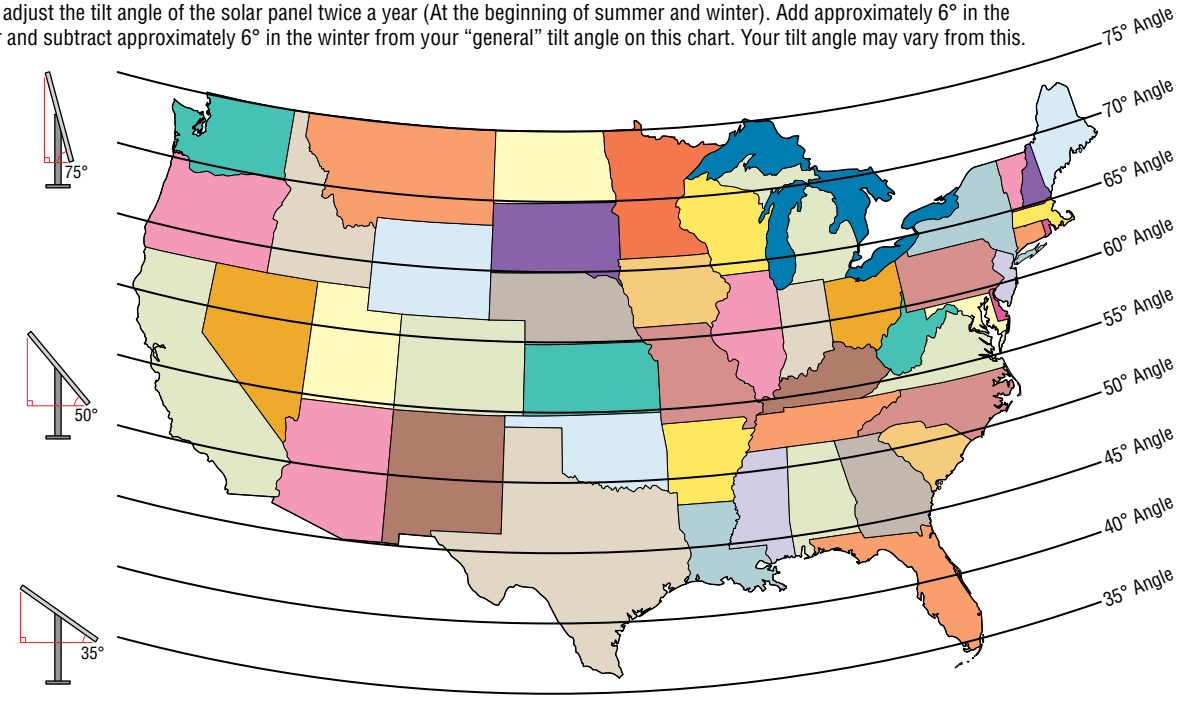

SECTION 2 - SOLAR POWER TO OPERATOR

Before connecting the solar panel wire to the operator, make sure that the solar panel is blocked from the sunlight. **The solar panel is "HOT" (discharging power) whenever the sun is shinning on it. It will shock you if you attempt to touch the wires while it is in the sunlight!**

Permanent wiring must be installed to the operator as required by local electrical codes. It is recommended that a licensed electrical contractor perform this work.

Since building codes vary from city to city, we highly recommend that you check with your local building department prior to installing any permanent wiring to be sure that all wiring to the operator complies with local code requirements.

THIS GATE OPERATOR MUST BE PROPERLY GROUNDED!!

Typical Grounding Sources

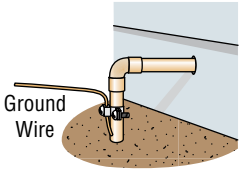

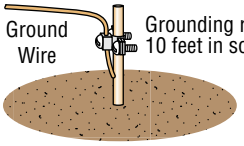

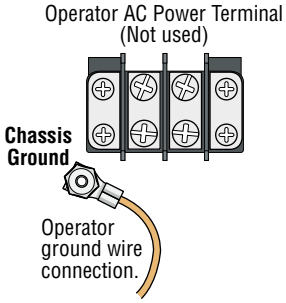

IMPORTANT: Ground wire shown without safety protection for clarity. Make sure ground wire is protected from being touched or electrical shock could occur!

2.1 Solar Power Connections

Connect **ONLY 24 VDC** power. DoorKing Solar Power Kit P/N 2000-070 is recommended. Third party **24 VDC batteries and solar panel** can be used if desired.

The solar panel will perform **MOST** efficient when installed as close as possible to the operator (Within a couple of feet). Keep in mind, the efficiency of the solar panel will diminish the farther away the panel is installed from the operator.

- **DO NOT** install a heater kit when using solar power.

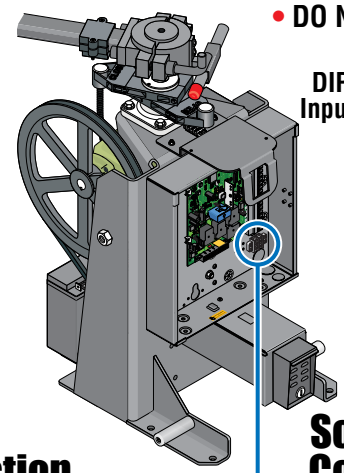

DIP Switch Input Power Setting

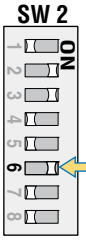

SW 2, switch 6 **MUST** be **ON** when using **Solar power.**

DO NOT power up the operator until "**Section 2.2**" is complete (see next page). **Damage could occur to the gate operator.**

DKS Solar Power Kit Solar Panel

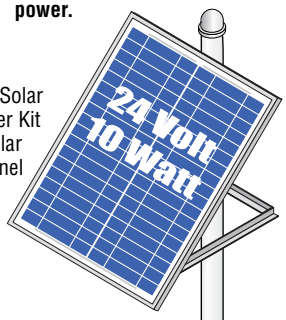

- Cover solar panel **BEFORE** connecting wire to power terminal.
- Route incoming solar power wire through the solar panel conduit and run wire to the **operator's power terminal**.
- Be sure wiring is installed in accordance with local codes. Be sure to color code all wiring.
- It is recommended that a surge suppressor (P/N 1878-010) be installed on the 24V solar power line to help protect the operator and circuit board from surges and power fluctuations.

24 VDC Battery Connection

Battery connection to operator **MUST** be **24 VDC**.

24 VDC Solar Panel Connection

Power Terminal

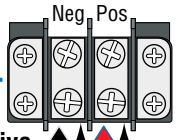

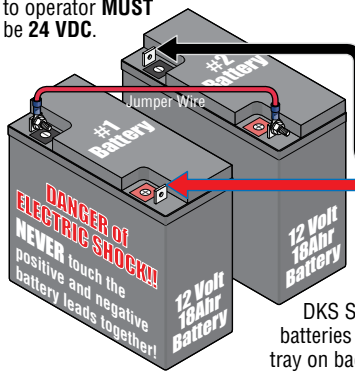

Negative

Positive

Polarity MATTERS!

DKS Solar Power Kit batteries fit into battery tray on back of operator.

Solar Power Wire

Solar Panel Conduit

Support Post NOT included

Dual gate operators **CANNOT** be used.

⚠ CAUTION

DO NOT connect an **AC input power wire** to the Model 6524-081's power terminal when using Solar Power or **DAMAGE** will occur and **VOID** the warranty!

EXTERNAL ENTRAPMENT PROTECTION MUST be connected or the gate operator WILL NOT function. See pages 28 & 29.

2.2 Power Select Jumper and Turning Power ON

The **"POWER SEL"** jumper on the circuit board **MUST** be set correctly or operator will not function correctly.

DO NOT cycle the operator until the **"DIP-Switches"** and the **"Limit Switches"** have been adjusted. **Damage could occur to the gate and gate operator.** See pages 22-24.

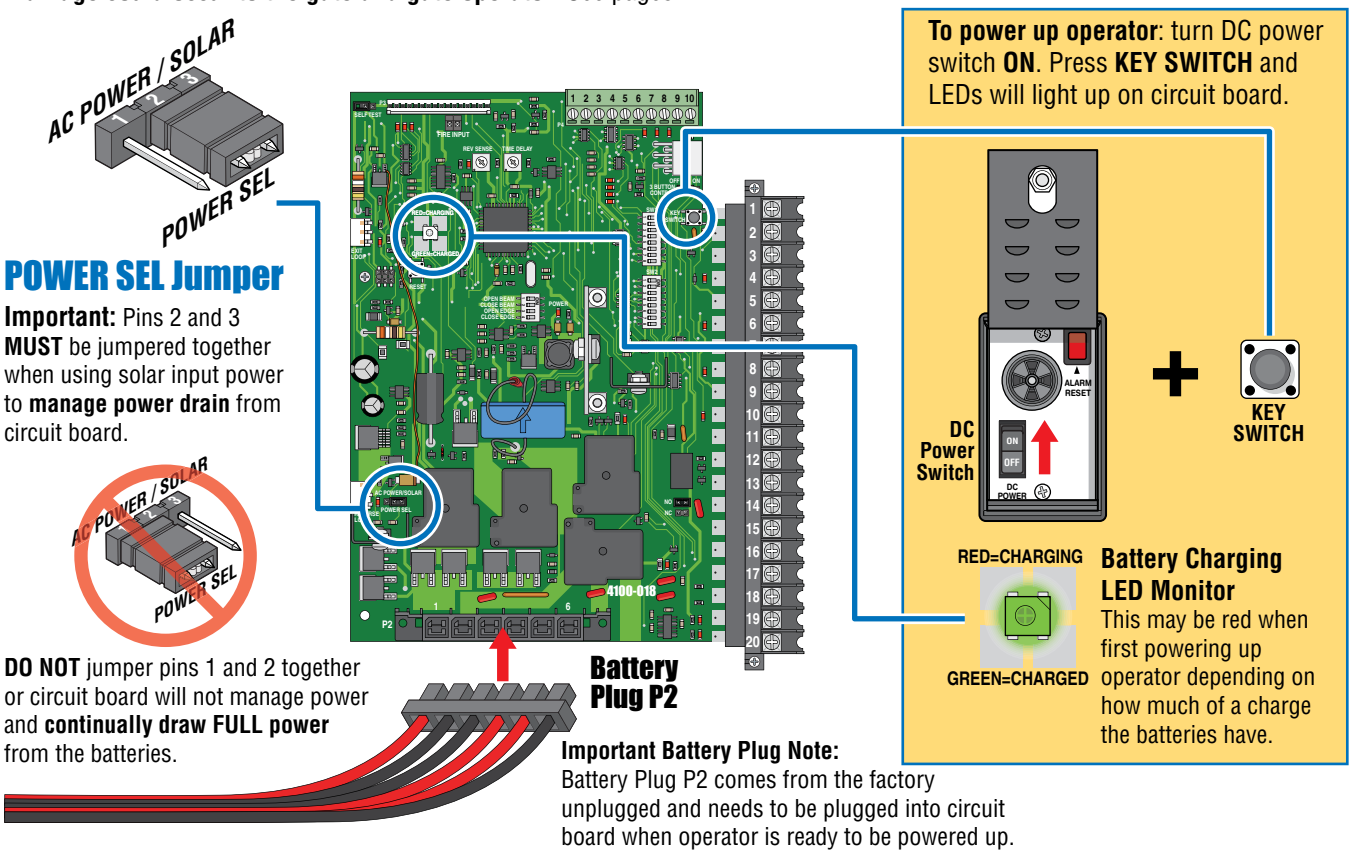

Power Management of Circuit Board

The operator manages the power drain of the circuit board by powering down unused inputs on the board when the operator is idle. When the gate has been closed for 1 min. or held open for 5 min., the circuit board powers down unused inputs to conserve power drain. The **Main terminals 1, 2, 3** and **4** and **EXIT Loop Port NEVER** power down. Any activation from one of these inputs will power up the circuit board when it is in the **powered down mode** (idle time). **It is important to have LOW CURRENT DRAW devices connected to terminal 3 and/or the Loop EXIT Port or operator performance will be significantly reduced!** The Battery life will be **MUCH** shorter.

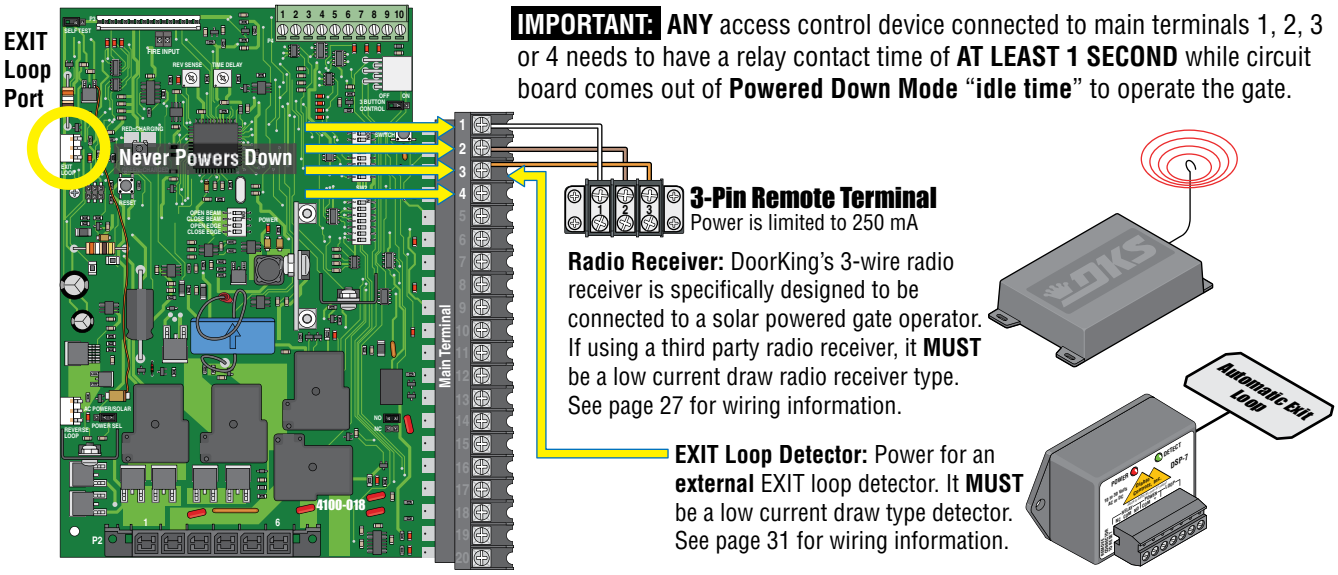

SECTION 3 - ADJUSTMENTS

The switch settings and adjustments in this chapter should be made after your installation and wiring to the operator(s) is complete. **Whenever any of the programming DIP-switches on the circuit board are changed, DC Power Switch must be shut-off, and then turned back on OR press Reset Button on circuit board for the new setting to take effect.**

3.1 4100 Circuit Board Descriptions and Adjustments

How LEDs Function

Illuminated **LEDs** Indicates that low voltage power is being applied to the circuit board.

Input LEDs should be OFF and will only illuminate when the input that is next to the LED is activated. See page 26. **Limit LEDs** will only illuminate when the respective limit switch has been activated.

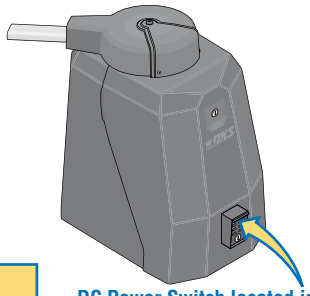

DC Power Switch located inside. **Note:** Alarm reset button **WILL NOT** reset circuit board after changing DIP-switch settings.

Reverse Sensor

Adjust reversing sensitivity for the open **AND** close direction of the operator, See page 25.

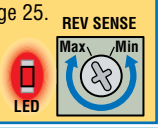

Auto-Close Timer

Auto-close timer (when turned on) SW 1, switch 2.

Time Delay: Adjust from 1 second (full counter-clockwise) to approximately 23 seconds (full clockwise).

Fire Dept Open

Connect ONLY emergency access controls accessible by authorized personnel (e.g., fire, police, EMS). Upon activation, alarm will sound and the operator will go into a hard shutdown after reaching the open limit. Operator must be reset to resume normal operation. See pages 27, 33-34.

Self-Test

Self-Test Mode Self-test mode is for bench checks ONLY! Operator **MUST** be disconnected from the gate. The operator will continually cycle the gate.

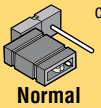

Normal Mode The jumper must be set at normal mode for normal operater function.

Circuit Board Power

The circuit board **powers down** when **NOT** in use to save battery life except for **Main Terminals 1**, **2**, **3** and **4** and the **Exit Loop Port** input which only uses the DKS plug-in low current draw loop detectors. These inputs will **NEVER** power down to allow continued normal operation of the operator while circuit board is in the **powered down** mode.

Key Switch:

Cycles the operator when pressed. Will use Auto-Close timer when turned ON (see above).

Note: When powering up operator, the key switch **MUST** be pressed **AFTER** DC power switch is turned ON to power up operator.

DIP-Switches

Set the DIP-switches on the circuit board to the desired settings. See switch-settings on next 2 pages.

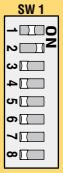

Note: DC Power Switch must be shut-off, and then turned back on **OR** press Reset Button on circuit board after changing settings before they will take effect.

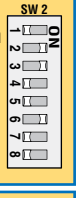

Reset Button:

Press after changing a DIP-switch setting on the board or if board locks up during operation.

Board Relay

Dry relay contacts (terminals 13-14) can be set for Normally Open (NO) or Normally Closed (NC) operation by placing the relay shorting bar on the N.O. or N.C. pins respectively. SW 1, switches 6 and 7 must be set to control relay. See next page for descriptions.

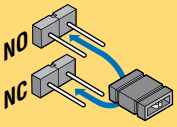

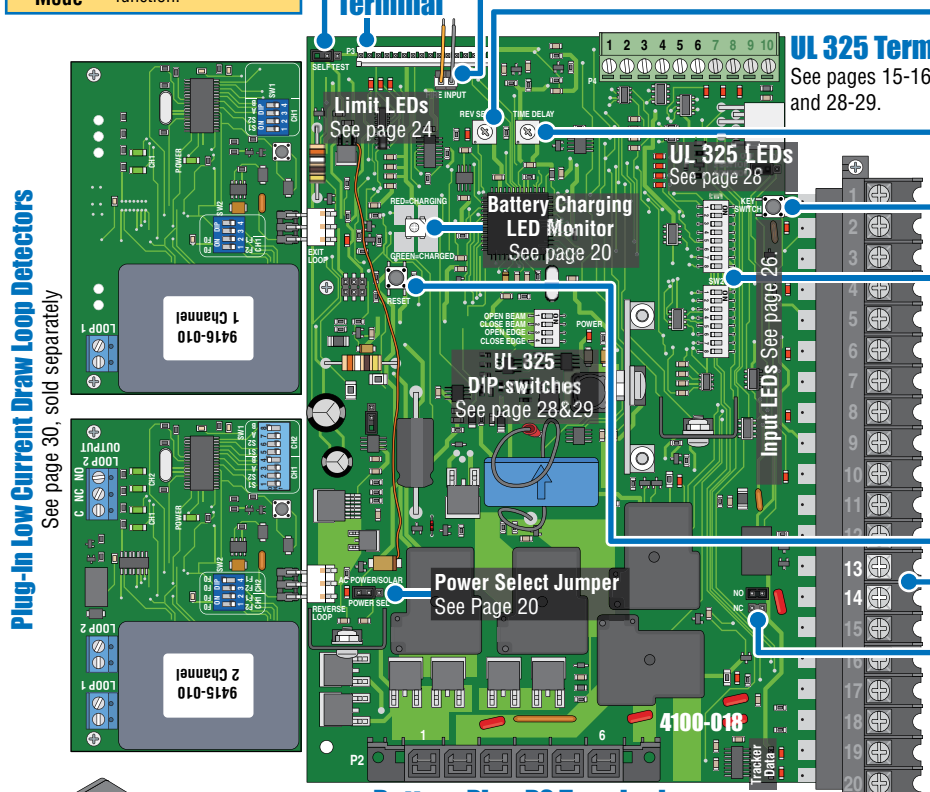

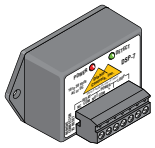

External Low Current Draw Loop Detectors
See page 31 and instruction sheet that comes with loop detector for more infornmation.

3.2 DIP-Switch Settings for 4100 Circuit Board

The two DIP-switches located on the circuit board are used to program the operator to operate in various modes and to turn on or off various operating features. Whenever a switch setting is changed, reset button on circuit board must be pressed for the new setting to take affect. **Note:** Alarm reset button **WILL NOT** reset circuit board after changing DIP-switch settings.

SW 1 (Top 8 Switches)

Switch	Function	Setting	Description
1	Operator Opening Direction	Opens Clockwise	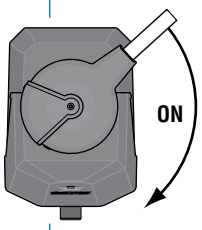
			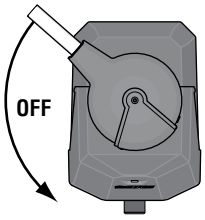 Opens Counter-Clockwise — Changes direction operator will cycle open upon initial power up and open command.
2	Auto-Close Timer	OFF	Auto-close timer is OFF. Manual input required to close gate.
		ON	**Normal Setting.** Auto-close timer is ON. Adjustable from 1-23 seconds.
3	Exit Loop Port Output	OFF	The output wired to main terminal 4 becomes the output from the exit loop detector plugged into the **EXIT Loop port**. DoorKing P/N 9416-010 or P/N 9415-010 **ONLY**
	Full Open Input	**ON**	**Normal Setting.** Main terminal 4 is a normal full open input.
4	Reverses Gate	**OFF**	Input to main terminal 10 and/or reverse loops will **reverse** gate during **close** cycle.
	Not Used	ON	**Do Not** use this setting for the 6524.
5	Quick-Close Timer Override (Slide Gates ONLY)	**OFF**	Quick-close feature is OFF.
		ON	Quick-close feature is ON. Opening gate will stop and begin to close as soon as all reversing inputs (Reverse loops, photo sensors) are cleared regardless of the distance the gate has opened. Used for slide gates only.
6 and 7	Relay: Main Terminals Terminal 13-14	6-**OFF** 7-**OFF**	**Normal Setting.** Relay activates when gate is at open limit.
		6-OFF 7-ON	Relay activates when gate is not closed.
		6-ON 7-OFF	Relay activates when gate is opening and open.
		6-ON 7-ON	Relay activates during opening and closing cycle.
8	Accessory Power	**OFF**	24 VDC 500 mA **accessory power** for accessories connected to main terminal 12.
		ON	**DO NOT USE** for Solar.

Setting **MUST** be used

SW 2 (Bottom 8 Switches)

Switch	Function	Setting	Description
1 and 2	Select Operator Type	1-OFF 2-OFF	**DO NOT USE** for the 6524. Slide Gate Operator
		1-OFF 2-ON	**Swing Gate Operator**
		1-ON 2-OFF	**DO NOT USE** for the 6524. Barrier Gate Operator
		1-ON 2-ON	**DO NOT USE** for the 6524. Overhead Gate Operator
3	Input Power Failure Mode	OFF	**DO NOT USE** for Solar.
		ON	Gate **operates normally** until batteries get low. Gate will **CLOSE and Shutdown operator** in close position until battery power reaches an operable level again.
4	Reverse/Shadow Input	**OFF**	Main terminal 10 is a REVERSE input.
		ON	**DO NOT USE** for solar power.
5	Overlapping Bi-Parting Gates	**OFF**	Switch 5 **MUST** be turned **OFF** for the 6524.
		ON	**DO NOT USE** for solar power. Overlapping gates **ARE** used (Dual swing gates ONLY). Secondary gate starts to open a few seconds before primary gate starts.
6	Circuit Board Power Management	OFF	**DO NOT USE** for Solar. For **115/230 VAC** input power. Board has **Constant power**.
		ON	Used for **Solar** input power. Board **Minimizes power** when not in use. All terminals shut down power except **main terminals 1, 2** and **3**.
7 and 8	Not Used	**OFF**	Switches 7 and 8 **MUST** be turned **OFF** for Model 6524 operator.

3.2 Continued

SW-1 Switch

(Top 8 switches on circuit board)

Typical Settings	SW 1
Opening - RT/LT	1
Normal - **ON**	2
MUST use - OFF	3
MUST use - OFF	4
MUST use - OFF	5
Normal - OFF	6
Normal - OFF	7
MUST use - OFF	8

Switch 1 - Operator Opening Direction: **Must OPEN** the operator's gate upon initial DC power up and open command. If the first open command begins to close the gate, turn DC power off and reverse this switch.

Switch 2 - Auto-Close Timer: Turns the auto-close timer on or off. If auto-close is ON, maximum time that can be set for is approximately 23 secs.
If auto-close is OFF, an open gate will not close until a manual input is received.

Switch 3 - EXIT Loop Port Output / Full Open Input: Determines that a device wired to main terminal 4 is a normal full open command (ON) **OR** terminal 4 becomes the output from the exit loop detector that is plugged into the **EXIT Loop port** in the circuit board (OFF) (Used for specialized functions).
Use DoorKing Plug-In Low Current Draw Loop Detectors **ONLY**.

Switch 4 - Standard Reverse: This switch **MUST** be turned OFF for the Model 6524. An input to main terminal 10 (Photo Sensor) **AND/OR** Reverse Loops will reverse a **CLOSING gate back to open position**. If auto-timer is turned ON, timer will time out and close the open gate. **Note:** SW 2, switch 4 MUST also be turned OFF when an external entrapment device (Photo Sensor) has been wired to main terminal 10 (see below).
DO NOT turn this switch ON.

Switch 5 - Quick-Close Timer Override: This switch **MUST** be turned OFF for the Model 6524. **DO NOT** turn ON.

Switches 6-7 - Relay: These work in conjunction with each other and determine when the relay on the board (main terminals 13-14) will be activated. This relay can be used as a switch for various functions such as illuminating a warning light when the gate is moving, or turning on a green light when the gate is full open. This relay is used for a **shadow loop** when using in-ground loops, see page 31.

Switch 8 - Accessory Power: This switch **MUST** be turned **OFF** when using solar power. A maximum of 500 mA of accessory power is supplied to any accessory connected to main terminal 12. Power to terminal 12 is **ONLY** available when the gate is opening, open, or closing. Power is **OFF** when the gate is closed. **DO NOT** turn this switch ON.

SW-2 Switch

(Bottom 8 switches on circuit board)

Typical Settings	SW 2
MUST use - OFF	1
MUST use - ON	2
MUST use - ON	3
MUST use - OFF	4
MUST use - OFF	5
MUST use - ON	6
MUST use - OFF	7
MUST use - OFF	8

Switches 1-2 - Select Operator Type: Sets the type operator that will be used with the circuit board.

Switch 3 - Input Power Failure Mode: This switch **MUST** be turned **ON** when using solar power. In the event that the solar panel cannot charge the batteries and battery power gets depleted through normal gate cycling, gate will **CLOSE** and operator will shut down. When solar panel power begins charging the batteries and they reach an operable level, the gate will resume normal operation.
DO NOT turn this switch OFF.

Switch 4 - Reverse/Shadow: This switch **MUST** be turned **OFF.** External entrapment device (Photo Sensor) **OR** a SHADOW LOOP wired to main terminal 10 is a **standard reverse** input (see SW 1, switch 4 above).
DO NOT turn this switch ON.

Switch 5 - Overlapping Dual Gates: This switch **MUST** be turned **OFF** for the 6524. **DO NOT** turn ON for the 6524.

Switch 6 - Circuit Board Power Management: This switch **MUST** be turned **ON** when using solar power. It minimizes the power drain by the circuit board. When the gate has been closed for 5 min. or held open for 5 min., circuit board will power down to conserve power. Main terminals 1, 2 and 3 will remain powered up. An input from one of these connections will power up the circuit board again.
DO NOT turn OFF when using solar power.

Switches 7-8 - Not Used: These switches **MUST** be turned **OFF** for the Model 6524. **DO NOT** turn ON.

3.3 Limit Sensors

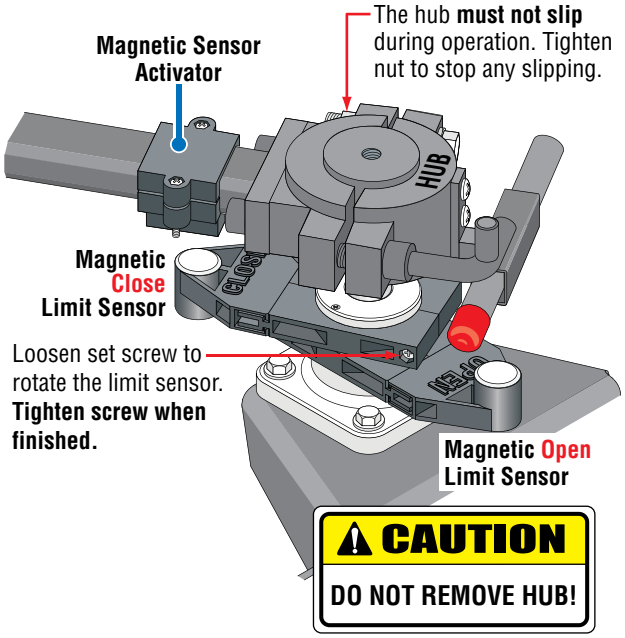

Important Limit Sensor Adjustment Note:
It is very important **NOT** to cycle the gate operator before the limit sensors are in the correct position or it could cause damage to the gate and operator.

With **power ON, Manually release** the gate operator hub with the release tool (See page 35). Physically move the gate to the desired open position. Loosen the set screw on the **OPEN** limit sensor and slowly slide it under the magnetic sensor activator until the **OPEN** limit Sensor LED lights up on the circuit board. Tighten the set screw and repeat this process for the close gate position. Secure the hub with the release tool and cycle the operator a few times and readjust if necessary.

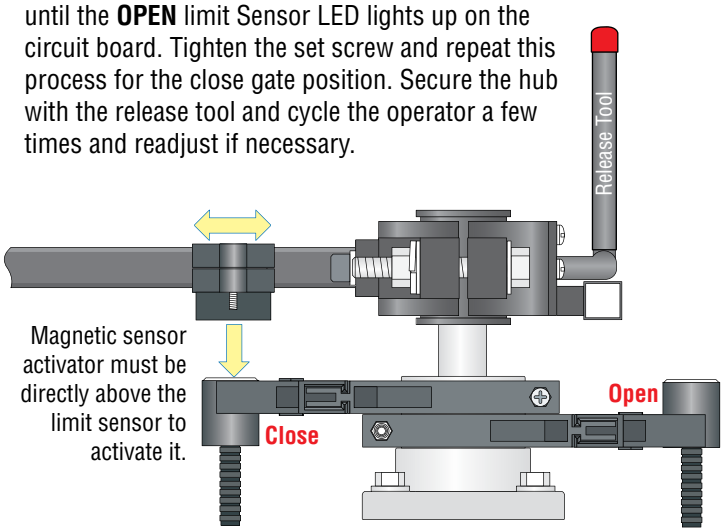

Note: If P3 plug is not connected to the circuit board and power is turned on, alarm will sound and operator will NOT function.

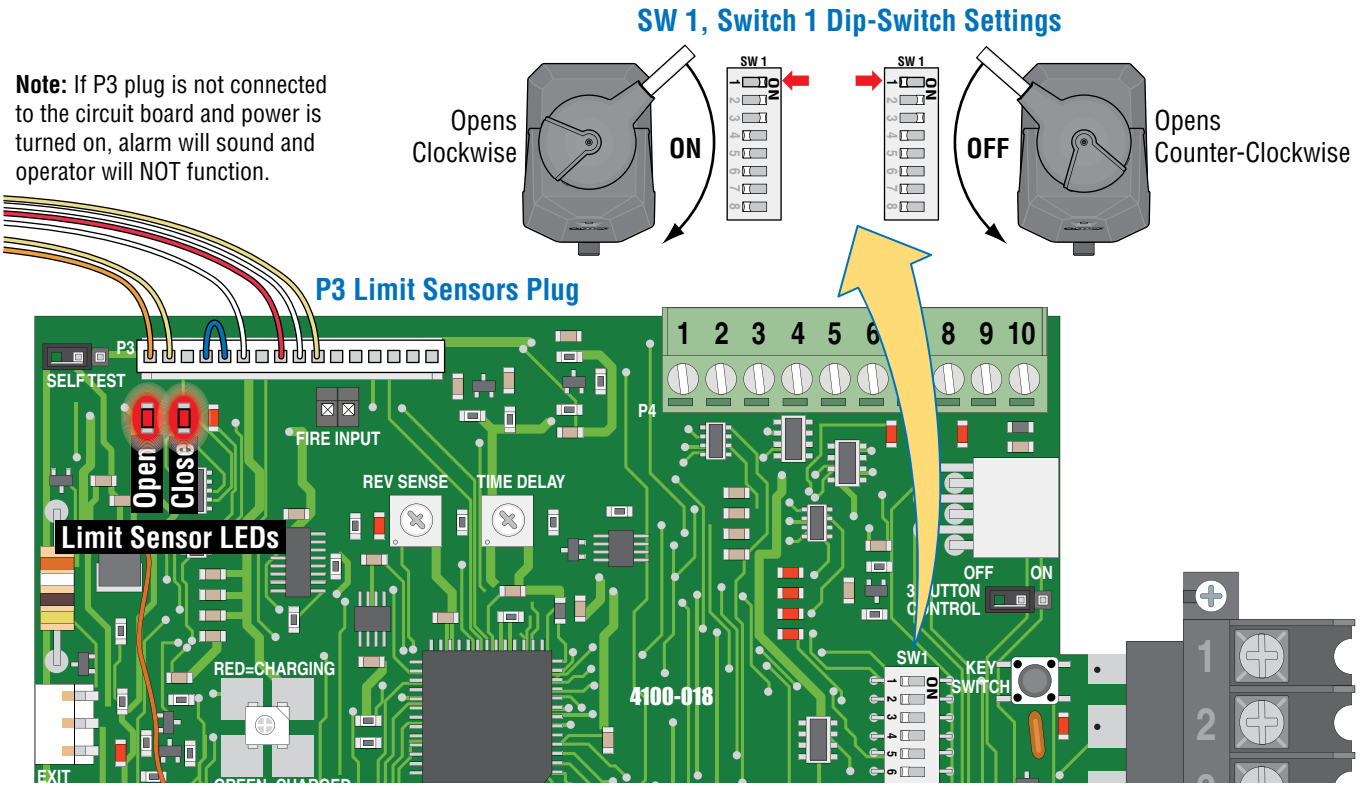

3.4 Inherent Reverse Sensor Adjustment

This vehicular gate operator is equipped with an inherent adjustable reversing sensor (Type A) used as entrapment protection according to UL 325 standards. **The gate will reverse direction after "physically" encountering an obstruction in either the opening or closing gate cycle**.

If the Auto-Close Timer (DIP-switch SW 1, switch 2) is ON and the gate physically encounters an obstruction during the **CLOSING** cycle, it will reverse to the open position and **HOLD** the gate at this position (Soft shutdown condition). Another input command is needed before the gate will reset and close again (open device command, safety device command, exit loop input). For the reverse sensors to function correctly, **THE HUB MUST NOT SLIP** when the gate encounters an obstruction. The gate must be properly installed and work freely in both directions. A good set of roller bearing hinges is essential for proper swing gate operation.

For the reverse system to function correctly, the gate must be properly installed and work freely in both directions and **the limit sensors must be properly adjusted BEFORE adjusting the reverse sensors**. The ideal adjustment will allow the operator to move the gate through its entire travel cycle without reversing, but will reverse upon contact with an obstruction with no more than 40 Lbs of force. This force can be measured with a gate scale.

CAUTION: Keep pedestrians and vehicles clear of the gate while adjusting and testing sensors!

Note: "**Push to Operate**" button will use the Auto-Close timer if turned ON (SW 1, switch 2 **ON**).

1 Press the "**Push to Operate**" button to **OPEN** the gate.

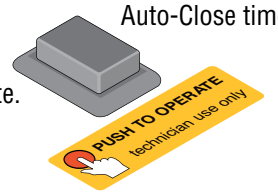

Note: The LED will turn on briefly when DC power is turned on.

2 While gate is opening, slowly rotate the reverse sensor clockwise until the LED lights up and the gate reverses direction. Rotate the reverse sensor back counter-clockwise approximately 1/8 turn to decrease the sensitivity (LED will turn off).

Note: The LED will light up during the first seconds of gate travel. Wait until it turns off before adjusting the reverse sensor.

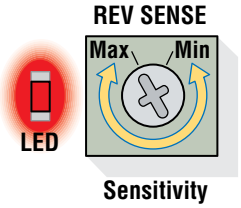

3 Press the "**Push to Operate**" button and **CLOSE** the gate. Make sure the gate closes completely. If it reverses and opens (LED will turn on), rotate the reverse sensor counter-clockwise a little more to decrease the reverse sensitivity (LED will turn off).
Cycle the gate a few times to be sure that it cycles completely in both directions, adjusting the sensor as necessary.

Safety Note: The LED will remain ON after a cycling gate gets obstructed during normal operation to indicate that the reverse sensor has been tripped. Always check the gate area for possible obstructions before putting operator back in service.

Test the operator reversing sensitivity:

Place an immobile object along the gate path, allowing the gate to strike it while in the **open** and **close** cycles. The gate must reverse direction after striking the object. If it does not, increase the reverse sensitivity and repeat this testing until the correct sensitivity has been achieved in **BOTH** directions. The operator will assume a soft shutdown (Hold the auto-close timer) after striking and reversing the gate which will require pressing the "**Push to Operate**" button to cycle the operator again.

SECTION 4 - WIRING TERMINALS

4.1 Terminal Descriptions

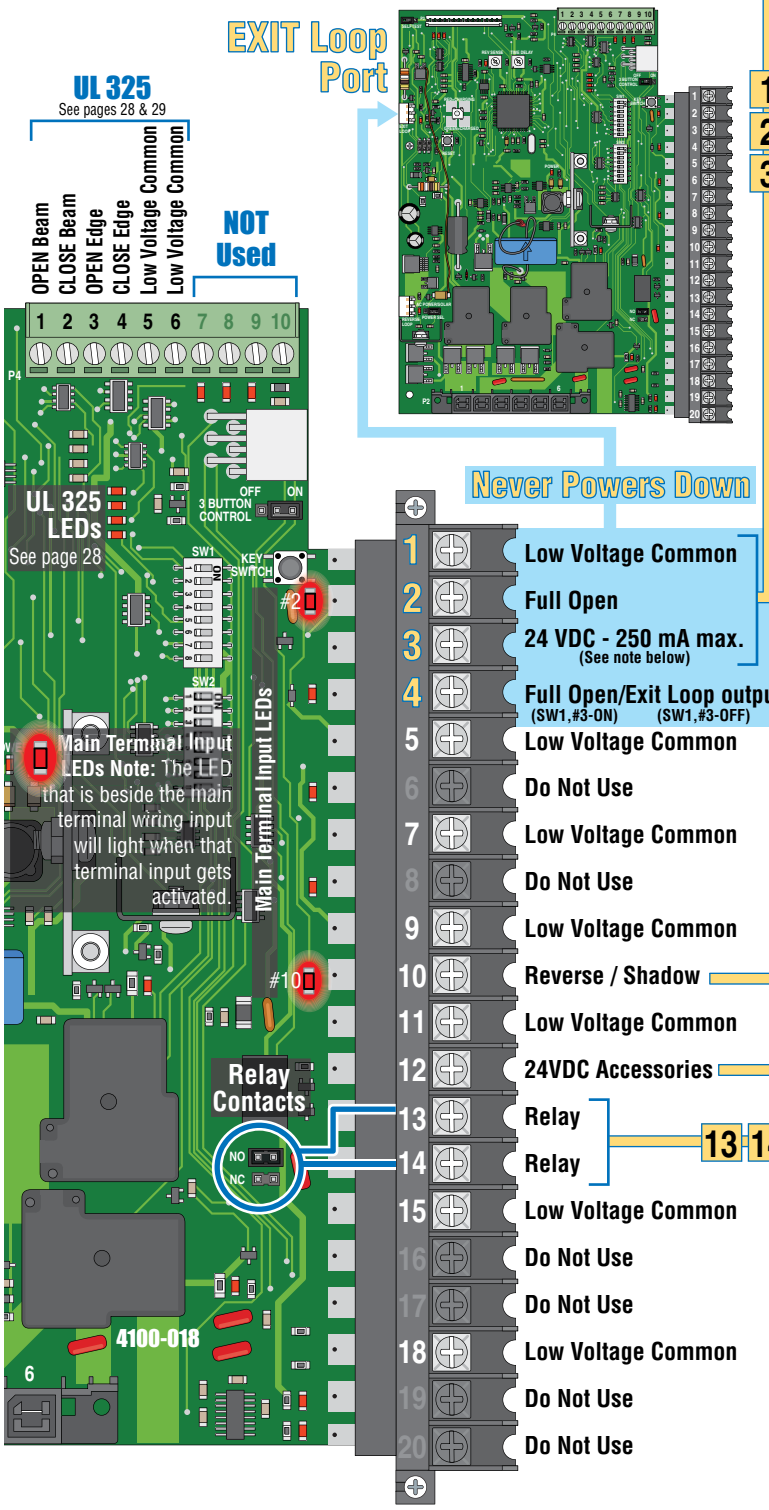

Terminals 1, 2 and 3 are **ALWAYS** powered up, even after circuit board has powered down to manage the power drain on the batteries.
Opening devices MUST connect to terminal 2.
IMPORTANT: **ANY** access control device (radio receiver, key switch, exit loop or safety opening device) needs a relay contact time of **AT LEAST 1 SECOND** to bring the circuit board out of "idle time" and operate gate. See page 20.

Terminal 4 is **ALWAYS** powered up.

- If SW 1, **switch 3** is **ON**, functions as a normal full open input (Normal setting).
- If SW 1, **switch 3** is **OFF**, input wired to terminal #4 becomes the output from the **EXIT loop detector** plugged into the **EXIT loop port**. (Used for specialized functions).

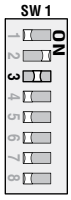

This input ONLY functions when gate is **fully opened** or in the **closing cycle**.

- SW 1, **switch 4** MUST be **OFF.** SW 2, **switch 4** MUST be **OFF.** When gate is closing, an input to main terminal 10 (eg: photo beam gets blocked) will **reverse** and open the gate. **Note:** If the auto-close timer is **ON**, when gate reaches the open position, timer will time out and close the gate.
- **DO NOT** turn SW 1, switch 4 **ON**.
- **DO NOT** turn SW 2, switch 4 **ON**.

Note: Main terminal 10 is not available for a photo sensor when using a SHADOW LOOP. See page 30 about shadow loop connection.

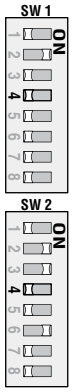

SW1, **switch 8 MUST be OFF**: 24-VDC 500 mA accessory power can be provided for desired accessories wired to terminal 12.

DO NOT turn ON SW1, switch 8.

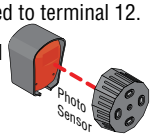

Note: power to terminal 12 is ONLY available when the gate is opening, open, or closing. Power is OFF when the gate is closed.

Operation of relay is dependent on setting of SW 1, **switches 6 and 7**. **Relay contacts** can be set for Normally Open (NO) or Normally Closed (NC) operation.

Contact rating is 1 amp maximum at 24-volts DC.

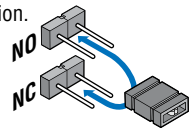

Note: Board relay is used for a shadow loop when using a **SHADOW LOOP**. See page 30 about shadow loop connection.

Terminal #3 Note:
Exceeding 250 mA of power from this terminal may cause the circuit board transformer to overheat, causing intermittent problems.

5.2 Control Wiring

IMPORTANT: Radio receiver, key switch, exit loop or safety opening device needs a relay contact time of **AT LEAST 1 SECOND** to bring the circuit board out of "**idle time**" and operate the gate. See page 20.

Type of wiring to be used on ALL external devices:
A) Type **CL2**, **CL2P**, **CL2R**, or **CL2X**.
B) Other cable with **equivalent** or **better** electrical, mechanical, and flammability ratings.

Important: Controls intended for user activation must be located at least six (6) feet away from any moving part of the gate and where the user is prevented from reaching over, under, around or through the gate to operate the controls. Emergency access controls only accessible by authorized personnel (e.g., fire, police, EMS) may be placed at any location in the line-of-sight of the gate.

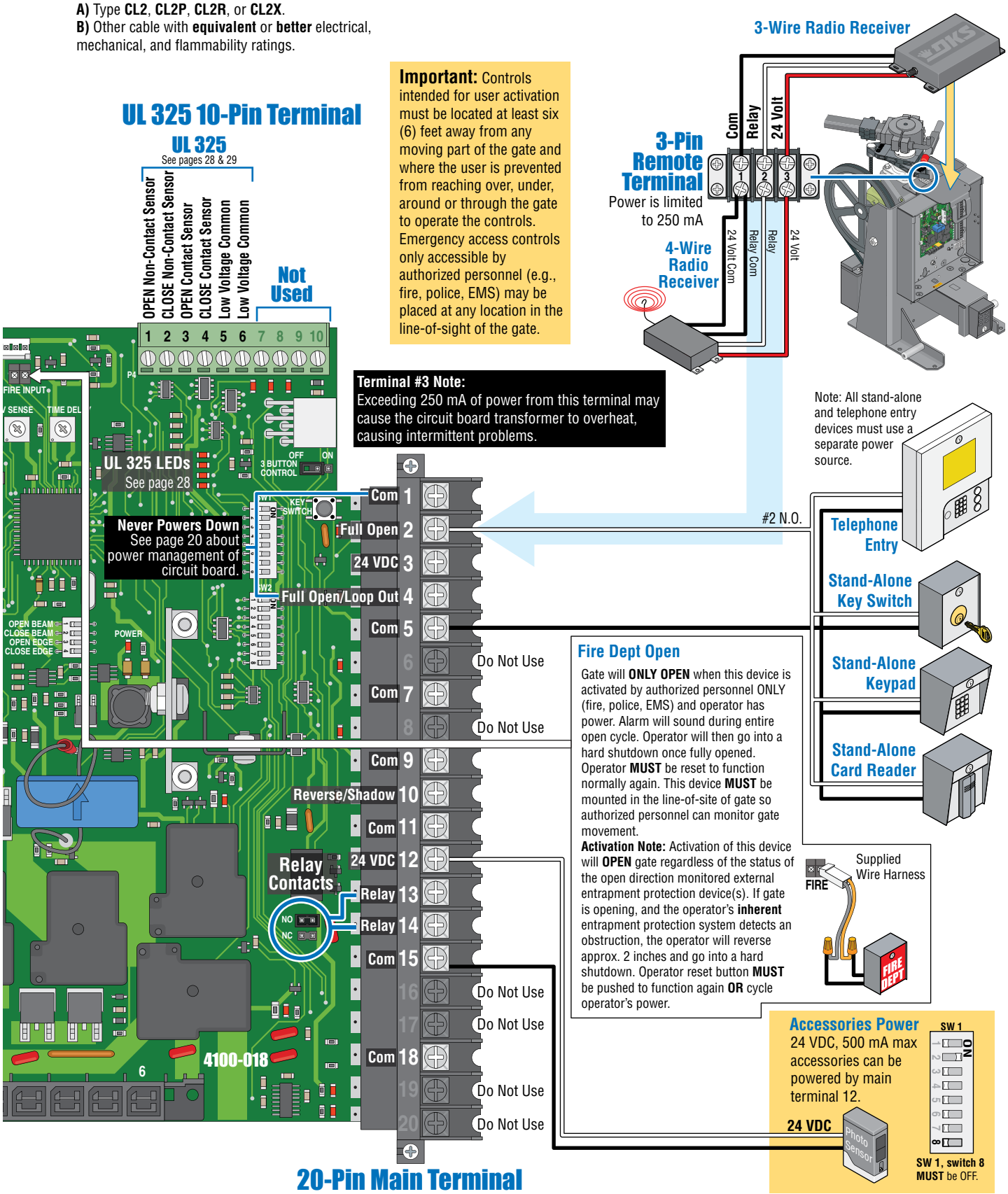

4.3 Entrapment Protection Wiring

External Entrapment Protection Devices:

In addition to the inherent reversing sensor system, this operator has a UL 325 terminal for the connection of **photo sensors**-Type B1 and/or **reversing edges**-Type B2 entrapment protection required by UL 325 standards. **Entrapment Protection must be provided for the gate system where the risk of entrapment or obstruction exists. The operator will NOT run without one or more monitored type B1 or B2 external entrapment protection devices installed in EACH entrapment area.** Install these devices where the risk of entrapment or a safety hazard exists. Installations can vary.

UL 325 Terminal

External Entrapment Protection Device Connection

ONLY connect monitored devices.

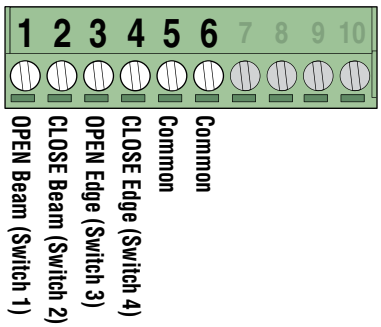

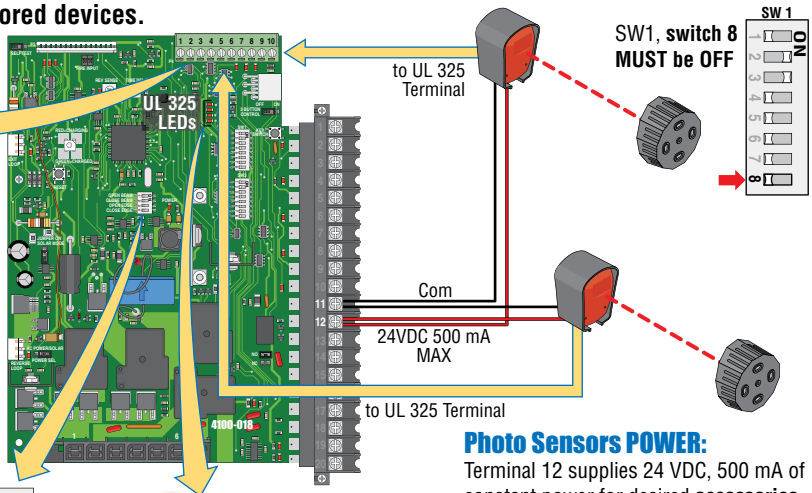

Photocell Performance Note: Heavy fog, snowy or rainy weather can restrict the performance of the beam. Snow/ice or water drops on the receiver or reflector lenses can also restrict the performance of the beam. **Direct sunlight** on the receiver or reflector lenses can **inhibit** the beam. This should be taken into consideration when positioning the photocell for installation.

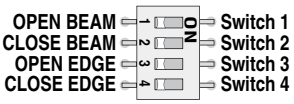

DIP-switches **MUST** be turned **ON** for each device wired to terminal.

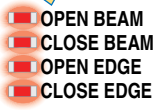

Photo Sensors POWER:

Terminal 12 supplies 24 VDC, 500 mA of constant power for desired **accessories**.

FLASHING LED indicates an open circuit (no entrapment device is connected).

STEADY ON LED indicates there is a short across the input.

Type of wiring to be used on ALL external devices:
A) Type **CL2**, **CL2P**, **CL2R**, or **CL2X**.
B) Other cable with **equivalent** or **better** electrical, mechanical, and flammability ratings.

Monitored Device Note: Only 1 monitored Device can be connected to each input. An **OPTIONAL** Expansion Board (sold separately) will allow connection for additional devices.

Monitored CLOSE Photo Sensor

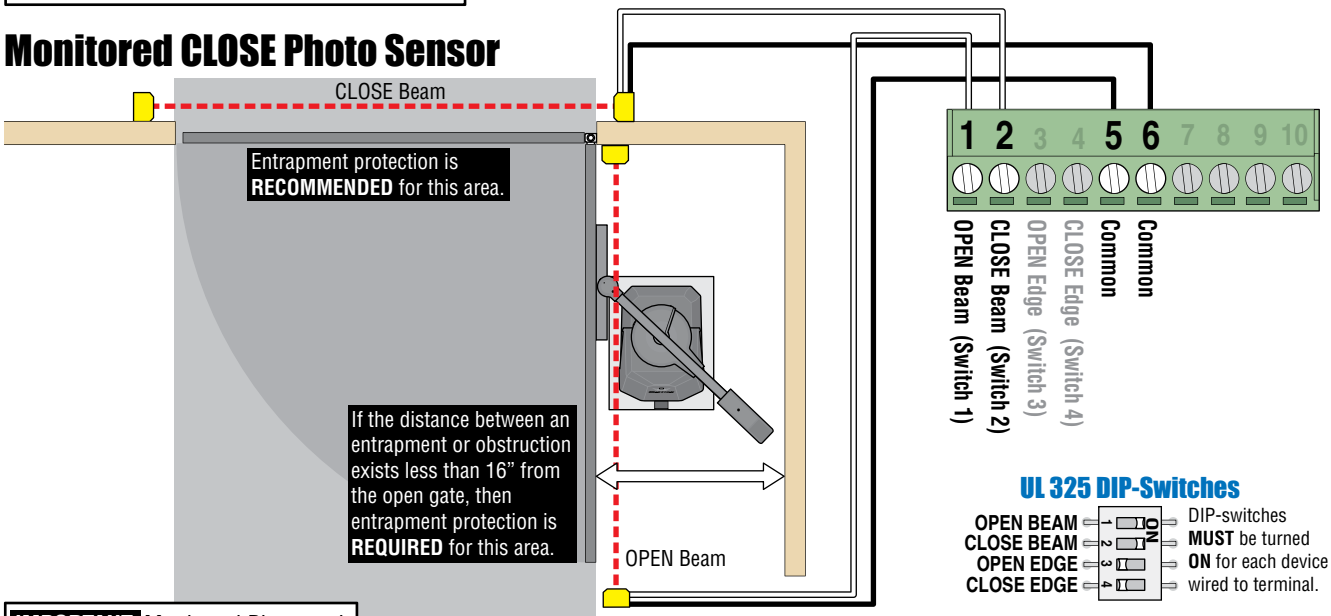

UL 325 DIP-Switches

DIP-switches **MUST** be turned **ON** for each device wired to terminal.

Monitored OPEN Photo Sensor

IMPORTANT: Monitored Photo and Edge sensors must be end-of-line resistive types. See specific manufacturer's wiring manual for more information.

4.3 Entrapment Protection Wiring Continued

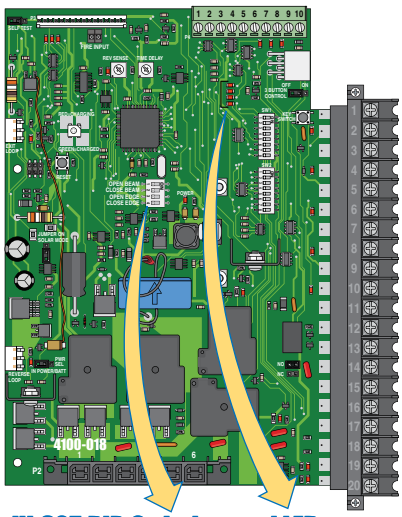

Entrapment Protection must be provided for the gate system where the risk of entrapment or obstruction exists. The operator will not run without one or more monitored type B1 or B2 entrapment protection devices in EACH entrapment area.

UL 325 DIP-Switches and LEDs

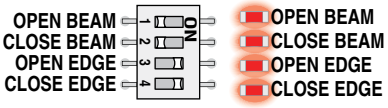

DIP-switches **MUST** be turned **ON** for each device wired to terminal.

FLASHING LED indicates an open circuit (no entrapment device is connected).

STEADY ON LED indicates there is a short across the input.

3-Sided Edge Note: When using **3-Sided Edge** active in **BOTH** directions of gate travel - jumper terminals 3 & 4 together and turn on UL DIP switches 3 & 4.

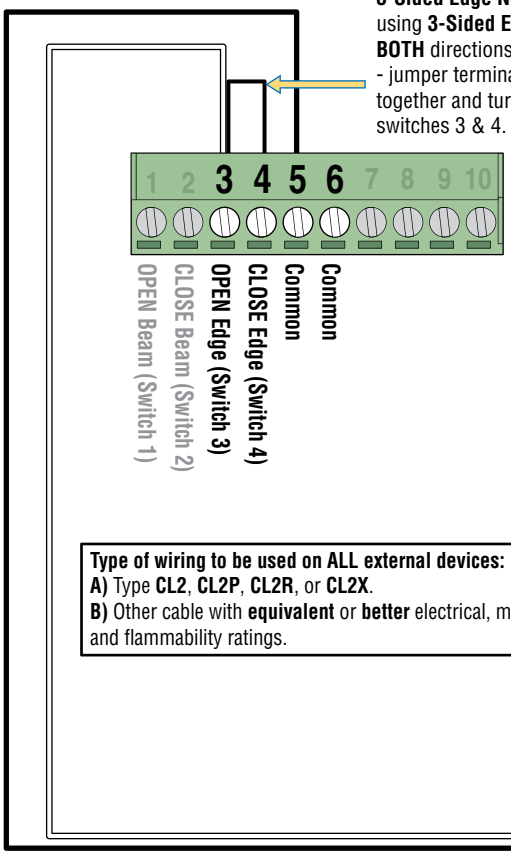

UL 325 Terminal
External Entrapment Protection Device Connection

Type of wiring to be used on ALL external devices:
A) Type **CL2**, **CL2P**, **CL2R**, or **CL2X**.
B) Other cable with **equivalent** or **better** electrical, mechanical, and flammability ratings.

HARDWIRED Multiple Reversing Edge Configuration

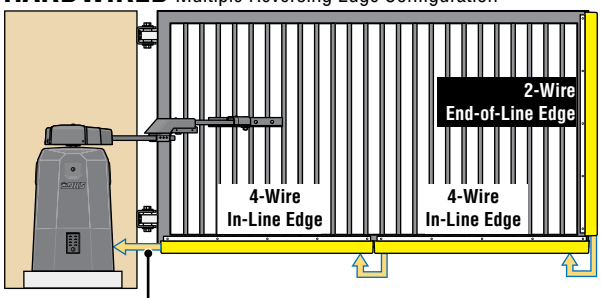

Wiring to Operator
Hardwiring arranged so that the communication between the sensor and the gate operator is **NOT** subjected to mechanical damage.

Wiring Multiple Reversing Edges
(Add as many "4-wire" In-Line edges as needed)
Reversing Edges are wired in series

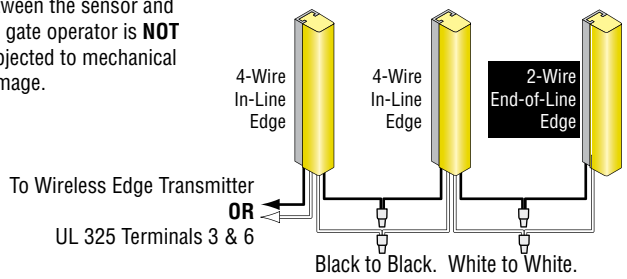

Monitored OPEN/CLOSE Reversing Edge

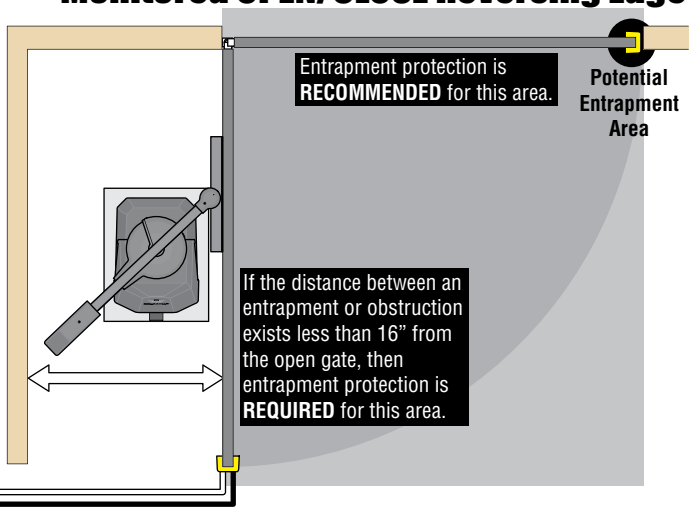

OPEN/CLOSE
2-Wire End-of-Line Edge

IMPORTANT: Monitored Photo and Edge sensors must be end-of-line resistive types. See specific manufacturer's wiring manual for more information.

4.4 Plug-In Loop Detector Wiring

To help protect the operator from accidentally closing on vehicles in the gate's path, DoorKing highly recommends that loops and loop detectors be installed. Loops are laid underneath, cut into asphalt or concrete driveways or buried beneath gravel and earth driveways. A loop detection system will sense a vehicle like a metal detector and send a signal to the gate operator preventing the gate from automatically opening or closing on a vehicle when it is in the gate's path. DoorKing recommends that a licensed installer perform this work.

- Loop detector wiring is shown for DoorKing plug-in loop detectors. If other loop detectors are used, refer to the installation instructions supplied with those detectors for wiring instructions.
- If other detectors are used, use a separate power supply to power these detectors.
- Loop layout shown is for a typical swing gate application with two-way traffic, or one-way exit only traffic.

DoorKing offers a free "**Loop and Loop-Detectors Information Manual**" PDF located at DoorKing's web site for more information. www.doorking.com

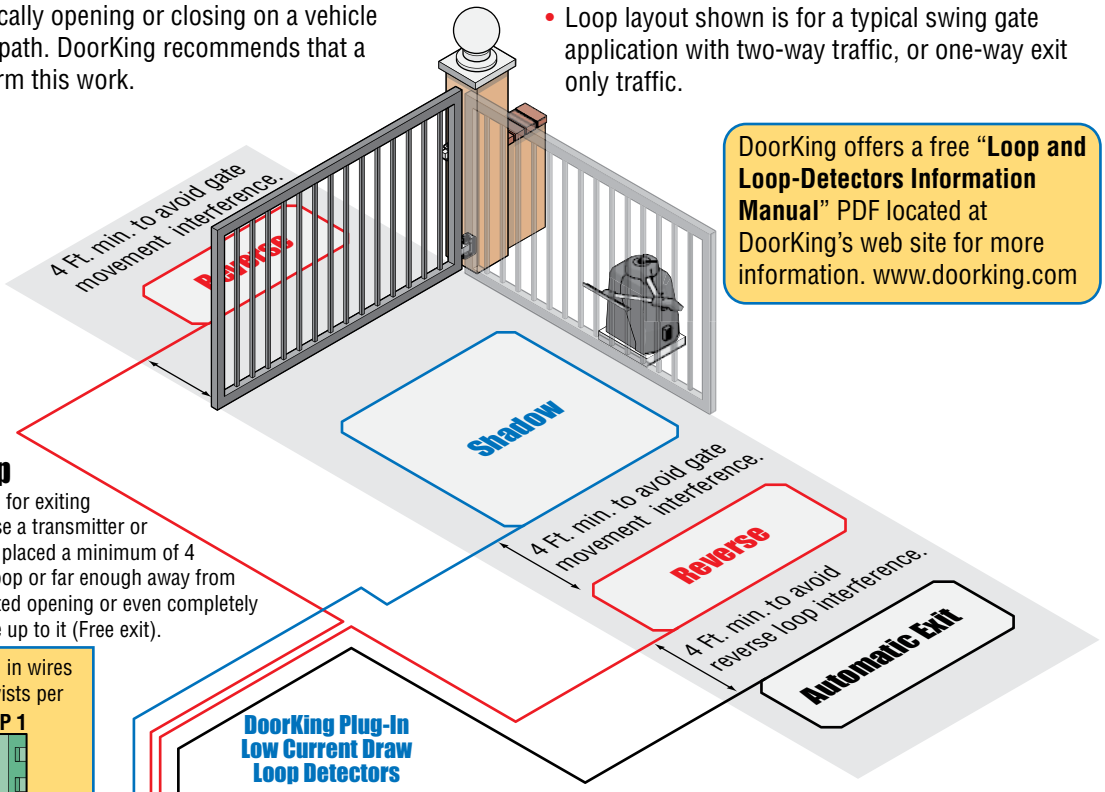

Automatic Exit Loop

Automatically opens the gate for exiting vehicles without having to use a transmitter or keypad. The exit loop can be placed a minimum of 4 feet away from the reverse loop or far enough away from the gate so the gate has started opening or even completely opened by the time you drive up to it (Free exit).

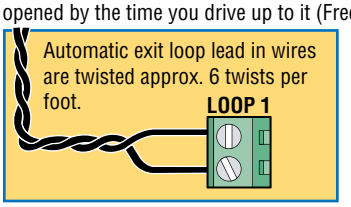

Shadow Loop will **ONLY HOLD** the main gates in the **Full Open Position** when a vehicle is on the shadow loop. However, it **WILL NOT stop or reverse** the main gates once they start to close.

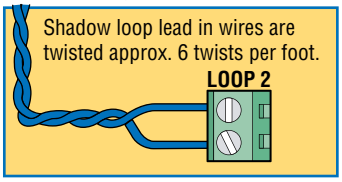

Reverse Loops are placed on each side of the gate to prevent the gate from closing on a vehicle in the gate's path. They will stop or reverse the cycling of the gate while a vehicle is in or near the gate's pathway.

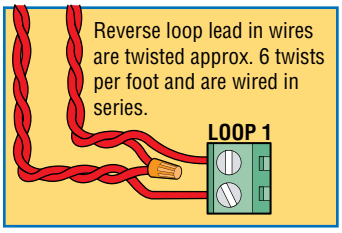

DoorKing Plug-In Low Current Draw Loop Detectors

Note: See loop detector instruction sheet to set DIP-switches on detectors.

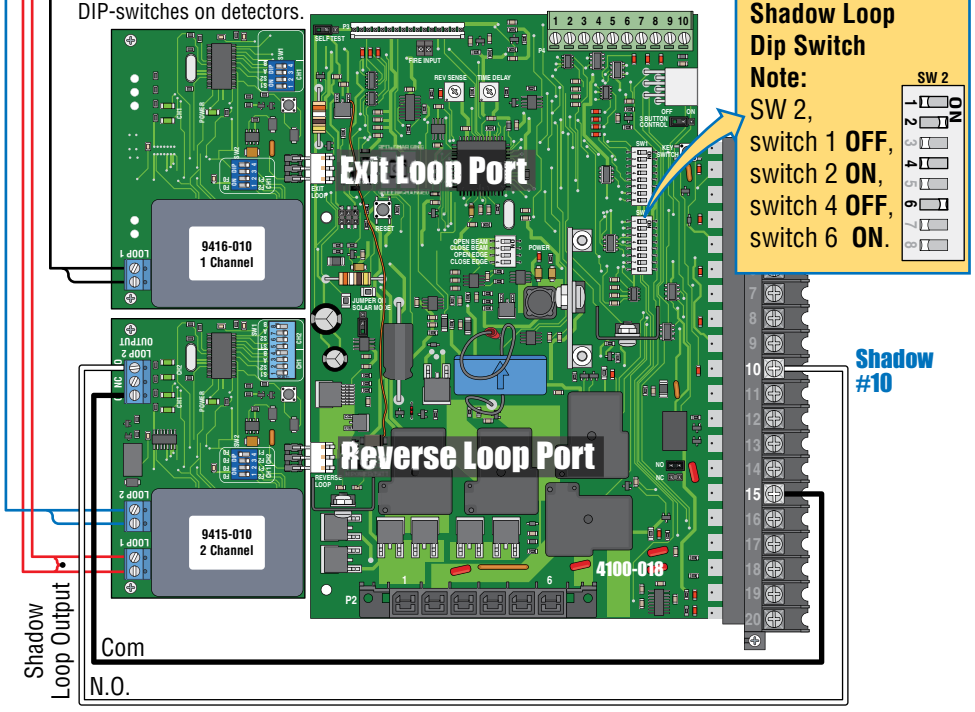

Swing Gate, Shadow Loop Dip Switch Note:
SW 2,
switch 1 **OFF**,
switch 2 **ON**,
switch 4 **OFF**,
switch 6 **ON**.

4.5 External Loop Detector Wiring

To help protect the operator from accidentally closing on vehicles in the gate's path, DoorKing highly recommends that loops and loop detectors be installed. Loops are laid underneath, cut into asphalt or concrete driveways or buried beneath gravel and earth driveways. A loop detection system will sense a vehicle like a metal detector and send a signal to the gate operator preventing the gate from automatically opening or closing on a vehicle when it is in the gate's path. **DoorKing recommends that a licensed installer perform this work.**

- Loop detector wiring is shown for Diablo external loop detectors. If other loop detectors are used, refer to the installation instructions supplied with those detectors for wiring instructions.
- DO NOT use EXIT or REVERSE loop ports on the circuit board
- Loop layout shown is for a typical swing gate application with two-way traffic, or one-way exit only traffic.

IMPORTANT: ANY loop detector used needs a relay contact time of AT LEAST 1 SECOND to bring circuit board out of "idle time" and operate gate.

Type of wiring to be used on ALL external devices:
A) Type **CL2**, **CL2P**, **CL2R**, or **CL2X**.
B) Other cable with **equivalent** or **better** electrical, mechanical, and flammability ratings.

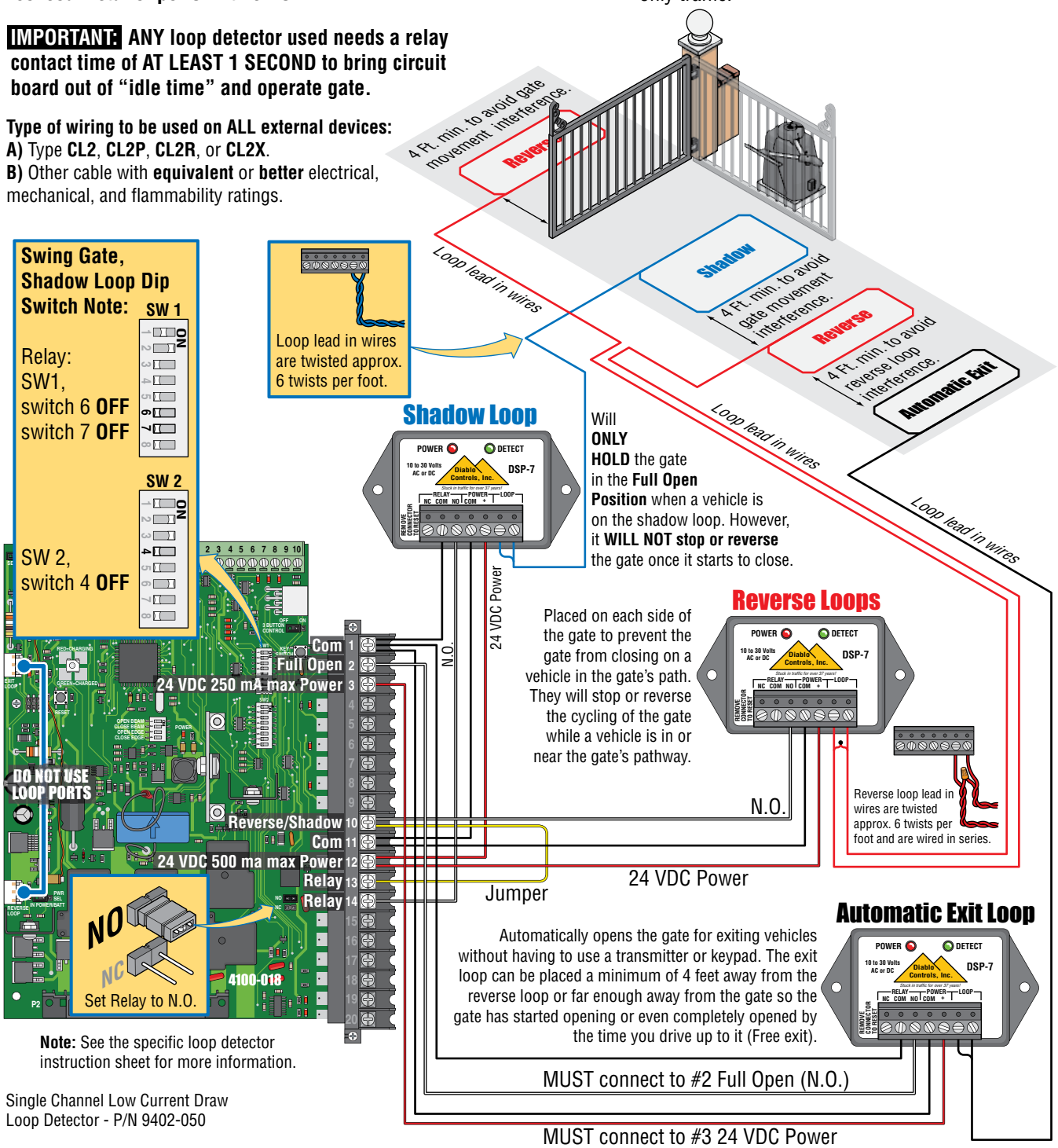

Note: See the specific loop detector instruction sheet for more information.

Single Channel Low Current Draw Loop Detector - P/N 9402-050

SECTION 5 - OPERATING INSTRUCTIONS

IMPORTANT SAFETY INSTRUCTIONS

WARNING - *To reduce the risk of injury or death:*

1. READ AND FOLLOW ALL INSTRUCTIONS.
2. Never let children operate or play with gate controls. Keep the remote control away from children.
3. Always keep people and objects away from gate. **NO ONE SHOULD CROSS THE PATH OF THE MOVING GATE**.
4. Test the operator monthly. The gate MUST reverse on contact with a rigid object or stop or reverse when an object activates the non-contact sensors. After adjusting the force or the limit of travel, retest the gate operator. Failure to adjust and retest the gate operator properly can increase the risk of injury or death.
5. Use the emergency release only when the gate is not moving and power has been shut-off.
6. KEEP GATES PROPERLY MAINTAINED. Read the owner's manual. Have a qualified service person make repairs to gate hardware.
7. The entrance is for vehicles only. Pedestrians must use separate entrance.
8. **SAVE THESE INSTRUCTIONS**.

5.1 DC Power Switch and Alarm Reset Button

Unlock the power switch cover and open to access the DC POWER switch and the operator ALARM RESET button.

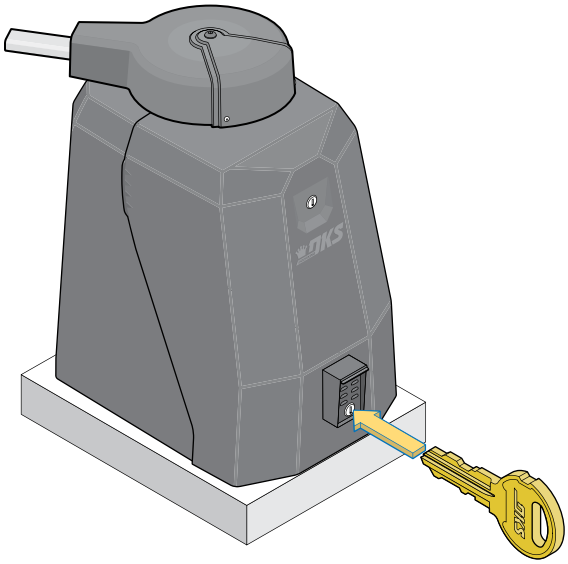

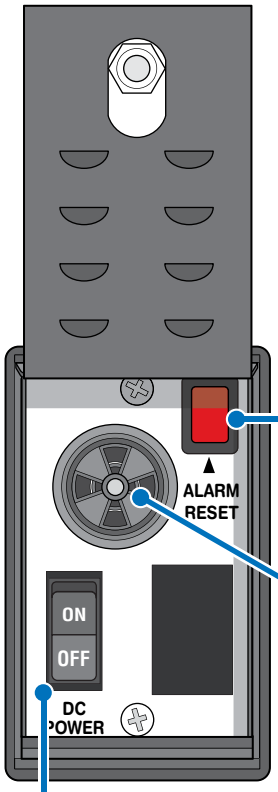

Alarm Reset Button - Only used to turn off the entrapment alarm and to restart the operator AFTER a HARD shutdown has occurred.

Alarm Siren

DC Power Switch - Powers the DC ON (toggle left) or OFF (toggle right).

Note: When powering up operator, the key switch **MUST** be pressed (located on circuit board) AFTER DC power switch is turned ON to power up operator.

5.2 Shutdown Conditions

Under various entrapment conditions the operator will assume either a **soft** or **hard (alarm)** shutdown. To determine what type of reset action is required, you will need to understand how the different entrapment conditions affect the gate operator.

Soft Shutdown

This occurs in various situations where the inherent or external entrapment protection devices have been activated. In a soft shutdown condition, the operator **will not** respond to any input that was present when the entrapment protection device sensed an obstruction. If the gate stops at the open position, the operator will not respond to the automatic close timer.

- **Example 1** - A time clock keys the gate open in the morning and an entrapment protection device senses an obstruction prior to the gate reaching the full open position. If the entrapment is sensed by the inherent system, the gate will reverse and run back to the closed position. The time clock input is still present, but the gate will not re-open.

NOTE: In some systems, the time clock input comes from the telephone entry system relay. This same relay may also provide open commands for a card reader, MicroPLUS transmitters and the visitor telephone entry. If so, these devices will also be disabled in a soft shutdown condition.

- **Example 2** - If the gate is closing and an entrapment protection device is activated, the gate will either stop or reverse and run back to the open position, depending upon if the external or inherent device was activated. The automatic close timer will not close the gate.

- **Example 3** - Vehicle arrives at open loop and gate runs towards the open position. The inherent entrapment protection is activated. The gate reverses and runs back to the closed position. If the vehicle is still present at the open loop a soft shutdown condition does not occur. The loop input provides an immediate reset of the operator and the gate will again run to the open position.

Resetting a Soft Shutdown

In some conditions, a soft shutdown will reset as soon as the entrapment condition clears. For example, if a non-contact sensor (photo sensor) is sensing an obstruction, the operator will stop the gate and assume a soft shutdown condition. When the photocell clears, the operator will return to normal operation.

When the operator is in a soft shutdown, activation of any “intended input” will reset the operator. An “intended input” includes any command input, any standard safety input and any loop input. Activating any of these inputs will reset the gate. At that point the gate will return to normal operation. If the gate is open, the automatic close timer will then time out and close the gate.

Hard Shutdown (Alarm Activated)

A hard shutdown condition occurs when the inherent entrapment protection system has sensed **TWO** consecutive obstructions before the gate reaches the full open or closed position.

- **Example** - The gate is closing and the inherent entrapment protection system senses an obstruction and causes the gate to reverse direction. As the gate begins to run in the open direction, a second obstruction is sensed prior to the gate reaching the full open position. Once the second obstruction has been sensed, the operator will stop, the audio alarm will be activated and all standard inputs are shut down (including open commands, safety commands, loop inputs, etc.).

The audio alarm will sound for five minutes, or until the operator’s alarm reset button is pushed. After (5) five minutes the alarm will “chirp every 5 sec.” and the hard shutdown condition will remain in affect until the alarm reset button is pushed.

- After 5 minutes, the audio alarm will “chirp” every 5 seconds. This indicates that the operator is in a hard shutdown condition and the alarm reset button must be activated to reset the operator and silence the alarm.

Continued on the next page

Resetting a Hard Shutdown

When the operator is in a hard shutdown condition (audio alarm activated or audio alarm “chirps” every 5 seconds), to silence the alarm, press the alarm reset button.

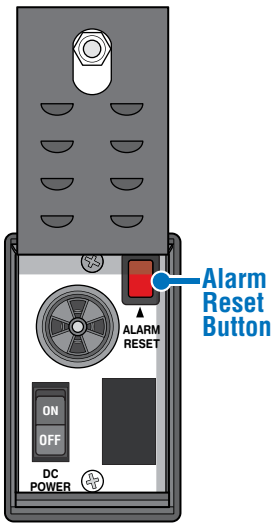

- Before resetting a hard shutdown, determine why the shutdown occurred. Inspect the gate for any obstructions along its path that could have activated the inherent entrapment sensing system. Inspect the gate and gate hardware.

NOTE: DoorKing operators have a built-in alarm reset push button mounted on the operator above the power ON-OFF switch. Activating this button will return the gate operator to normal operation, **but will not activate the gate operator.**

Once the gate has been reset, an open or close command is needed to start the gate operator. Most activating commands will cause the gate operator to cycle to the open position. This includes activation of a key switch or open command and activation of the automatic exit loop. Activation of a close command will run the gate to the closed position.

5.3 Manual Gate Operation

This operator is equipped with a manual release system that will allow the gate to be pushed open in the event of a power outage or equipment failure. **NEVER** remove the hub from the operator after manually releasing it.

This gate operator CAN NOT be manually forced open in the event of a power failure without FIRST manually releasing the gate! (See next page)

Never attempt to manually push open any gate with an operator attached to it until you have verified that ALL power to the operator has been shut-off.

Emergency Vehicle Access Conditions

The automatic vehicular gate system must be designed to allow access to emergency vehicles under different operating conditions.

1. During normal powered operation, emergency vehicles access the gate by use of the **Emergency Vehicle Access Device** installed on your gate system. The type of device that is used in your community is dependent on your city codes. These devices may include (but are not limited to) Fire Department lock boxes, Click-2-Enter radio receivers, strobe light sensors, siren sensors, etc.

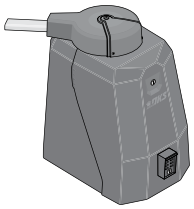

2. In the event of a power failure, The gate operator is equipped with a built-in **Battery Back-Up System**, this system will allow the gate operator to continue to function normally when solar input power is removed.

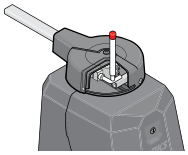

3. In the event of a solar input power failure and a back-up system (DC) power failure (low charged or dead batteries for example), the system must have a release system to allow the gate to be **Manually Operated** (See next page).

Manual Release

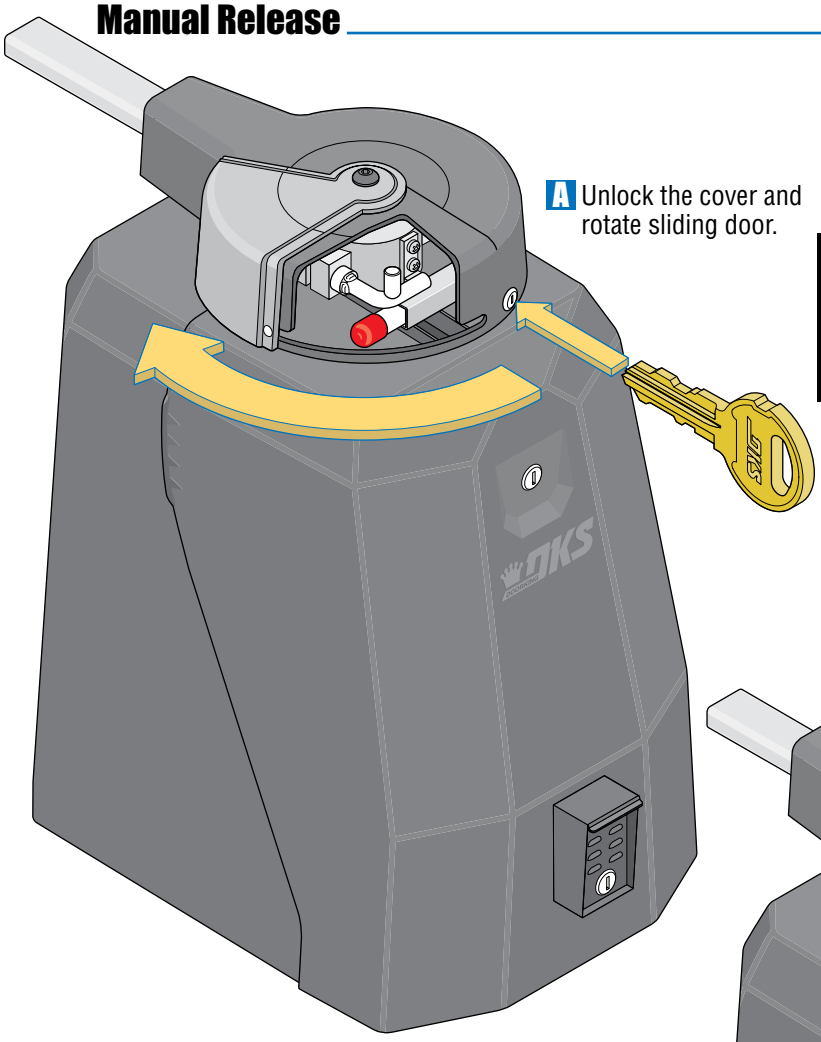

A Unlock the cover and rotate sliding door.

Never attempt to manually push open any gate with an operator attached to it until you have verified that power to the operator has been shut-off.

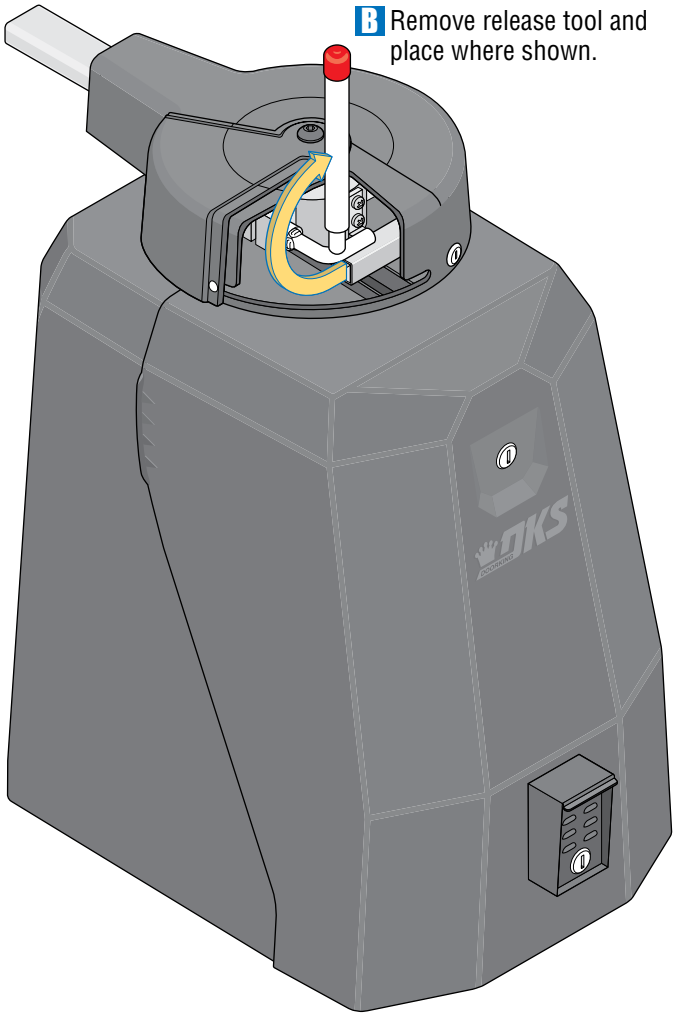

B Remove release tool and place where shown.

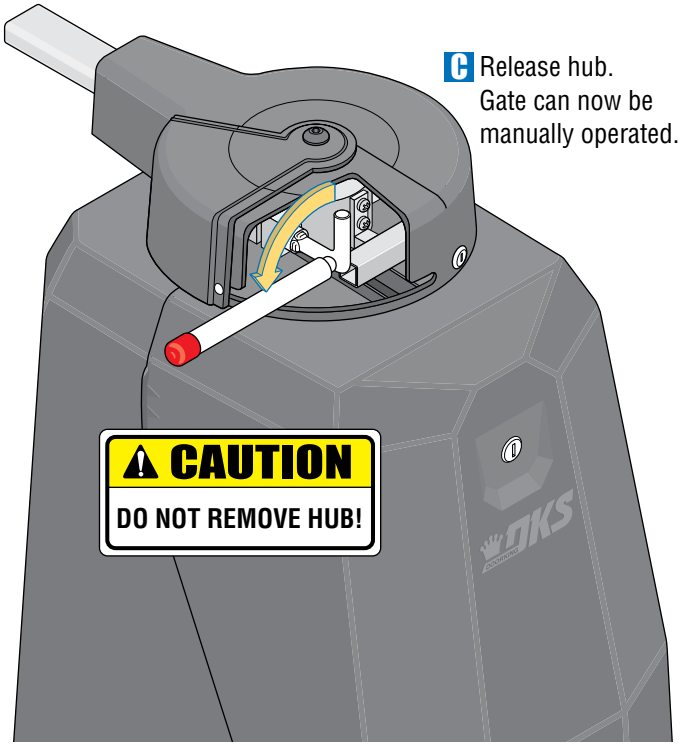

C Release hub. Gate can now be manually operated.

SECTION 6 - MAINTENANCE AND TROUBLESHOOTING

Inspection and service of this gate operator by a qualified technician should be performed anytime a malfunction is observed or suspected. High cycle usage may require more frequent service checks.

6.1 Maintenance

When servicing the gate operator, always check any external reversing devices (loops, photocells, etc.) for proper operation. If external reversing devices cannot be made operable, do not place this operator in service until the malfunction can be identified and corrected.

Always check the entrapment protection devices (external and internal) when performing any maintenance. If any of these devices cannot be made operable, remove this operator from service until the cause of the malfunction is identified and corrected. Keeping this operator in service when any entrapment protection devices are malfunctioning creates a hazard for persons which can result in severe injury or death should they become entrapped in the gate.

When servicing this gate operator, always turn power **OFF!!**

If gearbox requires oil, use only Mobil SYNTHETIC SHC-629 Oil. Do not completely fill gearbox with oil. Gearbox should be half full only. Do not exceed this level.

Operator Component	Maintenance	Monthly Interval		
		1	6	12
Warning Signs	Check that warning signs are on BOTH sides of the gate area.	✓		
Alarm	Activate the inherent reverse system by blocking the gate with a solid object. When the gate reverses, block the gate in the opposite direction prior to the limit being reached. The entrapment alarm should activate. Press the reset button to silence the alarm.	✓ ✓		
Arms	Check set screws and nuts. Check bushings for wear.		✓	
Batteries	Check the batteries for any leakage or loose connections. Batteries should be replaced every two years.	✓		
Drive Belt	Check for alignment, tightness and wear.		✓	
Fire Dept.	Check emergency vehicle access device for proper operation.	✓		
Gate	Inspect for damage. Check gate hinges for wear and grease if necessary.		✓	
Inherent Reverse System	Check that the gate reverses on contact with an object in both the opening and closing cycles. See page 44. Adjust the reversing sensor if necessary.	✓		
Loop(s)	Check vehicular reverse and shadow loops for proper operation.	✓		
Manual Release	Check manual release for proper operation. See page 43.	✓		
External Reverse Device	Check external reverse device(s) stop or reverse the gate when activated. See page 44.	✓		
Complete System	Complete check of gate and gate operating system.			✓

6.2 Troubleshooting

Have a good VOM meter with Min/ Max test button to check voltages and continuity. A Meg-Ohm meter capable of checking up to 500 meg-ohms of resistance is necessary to properly check the integrity of the ground loops. When a malfunction occurs, isolate the problem to one of three areas: 1) the operator, 2) the loop system, 3) the keying devices. **Use caution when checking high voltage areas.**

1. Check the input indicator LEDs. They should only come ON when a keying device (card reader, push button, etc.) is activated. If any of the input LEDs are ON continuously, this will cause the gate operator to hold open. Disconnect the keying devices one at a time until the LED goes OFF.

2. Check any external entrapment protection devices. Any short or malfunction in these devices can cause the gate operator to stop or to hold open.

3. A malfunction in a loop or loop detector can cause the gate operator to hold open, or to not detect a vehicle when it is present over the loop. The LEDs on the loop detector will light only when the loop has detected an object above it. If the LEDs stays on after the object has gone, then the loop detector has malfunctioned. Disconnect the loop detector from the operator circuit board. If the malfunction persists, the problem is not with the loop system. For more information on trouble shooting loops and loop detectors, refer to your loop detector instruction sheet and to the DoorKing Loop and Loop Detector Information Manual.

4. Check to be sure that there are no shorted or open control wires from the keying devices to the gate operator. If a keying device fails to open the gate, momentarily jumper across terminals 1 and 2 (or 1 and 6) on the gate operator circuit board. If the gate operator starts, this indicates that a problem exist with the keying device and is not with the gate operator.

5. Check the input voltage supply. A voltage drop on the supply line (usually caused by using too small supply voltage wires) will cause the operator to malfunction.

Symptom	Possible Solution(s)
Operator will not run. Power LED is OFF.	• Check that power to the operator is turned ON. • Check that **ANY** access control device wired to terminals 1, 2 & 3 (radio receiver, key switch, exit loop or safety opening device) has a relay contact time of **AT LEAST 1 SECOND** to bring the circuit board out of “idle time” and operate gate. • Check for DC power at the power input terminals. If power is absent, check incoming power to operator. • Be sure DC power switch is ON. Check for 24 VDC at P2, terminals 1 (+) and 2 (-). If no power, faulty bridge rectifier or toroidal transformer. If power is present, possible faulty board.
Operator will not run. Power LED is ON.	• Insure that a minimum of one (1) external entrapment protection device is connected in EACH entrapment area and the inputs are connected and enabled (UL 325 DIP-switches are turned ON).
Operator will not run, entrapment protection input(s) LED is ON.	• The entrapment protection device has a fault or the wiring to it is shorted.
Operator will not run, entrapment protection input(s) LED is Blinking.	• The entrapment protection device is not connected or the wiring to it is open.
Gate will not reverse when an obstruction is encountered.	• Check ERD (Reverse Sensor) setting.
Gate opens a short distance, then stops and reverses.	• Check the reversing sensitivity. • Disconnect the gate from the gate operator and check that the gate slides freely without binding. • Gate might be too heavy. • Continue troubleshooting.

Symptom	Possible Solution(s)
Gate opens but will not close.	• Check the input LEDs. Any ON will hold the gate open and indicates a problem with a keying device. • Check the external safety devices. Any activated will hold the gate open and indicates a problem with the safety device. • Check the loop detectors. Any activated can hold the gate open and indicates a problem with the loop detector or ground loop. • Operator may be in a "soft shutdown." Activate any keying device to determine if operator returns to normal operation. • If automatic close is desired, be sure SW-1, switch 2 is ON.
Gate closes but will not open.	• Operator may be in a "soft shutdown." Check input LEDs. If any are ON, momentarily disconnect, then re-connect the wire going to the respective terminal. Operator should open. • Check to be sure that the operator is running in the proper direction. Turn power OFF, and then back ON. Activate a keying device. Operator should run in the open direction. If operator runs in the close direction, turn power OFF and change direction switch SW-1, switch 1. Go to above section if operator now opens but will not close. • Be sure that the respective LED on the control board lights when the keying device connected to the respective terminal is activated. If LED does not light, momentarily place a jumper wire from terminal 1 to the input terminal being checked. If LED lights and gate opens, problem is with the keying device. If LED does not light, replace control board.
Gate starts to close, then reverses to open.	• Check that the reverse sensitivity is properly adjusted. • Disconnect the gate from the operator and check that the gate operates freely without any binding. • Check the loop detector LEDs and input LEDs. Any that flash ON will cause the gate to reverse. • Check for proper loop wiring. A mis-wired loop detector will cause the gate to reverse. • Continue troubleshooting.
Gate closes and then re-opens.	• Check for any input or loop detector LEDs that are ON. • Check that the operator is running in the proper direction (see "gate closes but will not open" above).
Alarm sounds for 5 minutes and then chirps once every 5 seconds. Operator will not run.	• Operator is in a "hard shutdown" condition. Alarm Reset button must be pressed to return operator to normal operation. See pages 33 and 34 for "hard shutdown" information.
Operator has intermittent functionality problems that vary.	• The main terminal #3 250 mA power has been exceeded. Check total amp draw of connected device(s).

6.3 Built-in Diagnostics

This gate operator is designed with built-in diagnostics that will alert you to potential or existing problems that the microprocessor has detected. Specific fault conditions are checked and the operator will signal that a fault exist through the built-in alarm.

Constant tone is heard when power is applied: This indicates that the limit switch wire harness is not connected to the circuit board. In this condition, the operator will not run and the tone will continue until the fault is corrected. Check to be sure that the limit switch plug is properly inserted into P3.

Constant tone is heard: This indicates that the operator is in a hard shutdown condition. The tone will continue to sound for five minutes, and then will beep once every five seconds. The alarm reset button must be pressed or power must be removed and then reapplied to return the operator to normal operation.

Short tone is heard every five seconds: This indicates that the operator has been in a hard shutdown condition in excess of five minutes. This will continue until the alarm reset button is pressed or until power is removed from the operator.

Operator runs for 1 second and stops, two short tones are heard: This indicates that there may be a fault with the current sensor circuit. Check that the black current sensor wire has been passed through the hole in the current sensor donut with the correct number of loops (DC motor - 2 loops).

6.4 Accessory Items

UL 325 Monitored Entrapment Protection Devices available for the model 6524 swing gate operator.

Type B1 Non-Contact Devices

DoorKing
Model 8080-057
Model 8080-060

Miller Edge
OptiGuard
TruGuard

EMX Industries
Model IRB-MON2
Model IRB-RET2
Model IRB-325
Model NIR-50-325

Omron
Model E3K-R10K4

Seco-Larm
Model E-936-S45RRGQ
Model E-960-D90GQ

Type B2 Contact Devices

DoorKing
8080 Series Sensing Edges

Miller Edge
CPT210
CPT215
ME110
ME111
ME120
ME120C5
MG110
MG123
MGR20
MGS20

ASO
Sentir 35.55 CT
Sentir 35.85 CT
Sentir 92.20 RT
Sentir 95.20 AT

Accessory items available for the model 6524 swing gate operator.

Magnetic Lock - Magnetic Gate Lock Kit provides an excellent means to secure swing gates and is a fail-safe device allowing emergency vehicle access upon power outage. P/N 1216-080 and P/N 1216-081
Time Clock - 7 day time clock can be used to automatically open gate at pre-set time and days. Compact clock fits inside the operator. P/N 2600-791 - 7 day clock
Uphill Arm Pivot Assembly - Ball joint pivot gate connection used on uphill or downhill opening swing gates. P/N 6500-490
Torsion Rods - Torsion rod assembly is used on uphill swing gates for counter balance. P/N 1203-084
Hinges - Heavy-duty ball bearing hinges provide easy swing gate operation. P/N 1200-009, P/N 1200-019, P/N 1200-039
Surge Devices - High and low voltage surge suppressors help prevent circuit board failure caused by lightning strikes and power surges.
P/N 1879-010 - High Voltage
P/N 1878-010 - Low Voltage
Speed Bumps - Prefabricated six-foot speed bump reduces traffic speed through gate system. P/N 1610-150
Standard Replacement Battery - 12 Volt 7.2 Amp/Hr. P/N 1801-003. Two (2) required.
12 Volt 18 Amp/Hr Extended Battery - P/N 1801-004. Two (2) required.
24 VDC Solar Power Kit - Two 12 Volt 18 Amp/Hr Batteries, One 24 VDC 10 Watt Solar Panel. P/N 2000-070.
Low Current Draw External Loop Detector - Detectors are solar friendly and mount into solar control box.
Single channel detector - P/N 9402-050
Plug-In Low Current Draw Loop Detector - Detectors plug directly into ports on circuit board simplifying wiring. Can be used with solar powered operators.
P/N 9416-010 - Single channel detector
P/N 9415-010 – Two-channel detector

6.5 Gearbox Shaft Extension Replacement

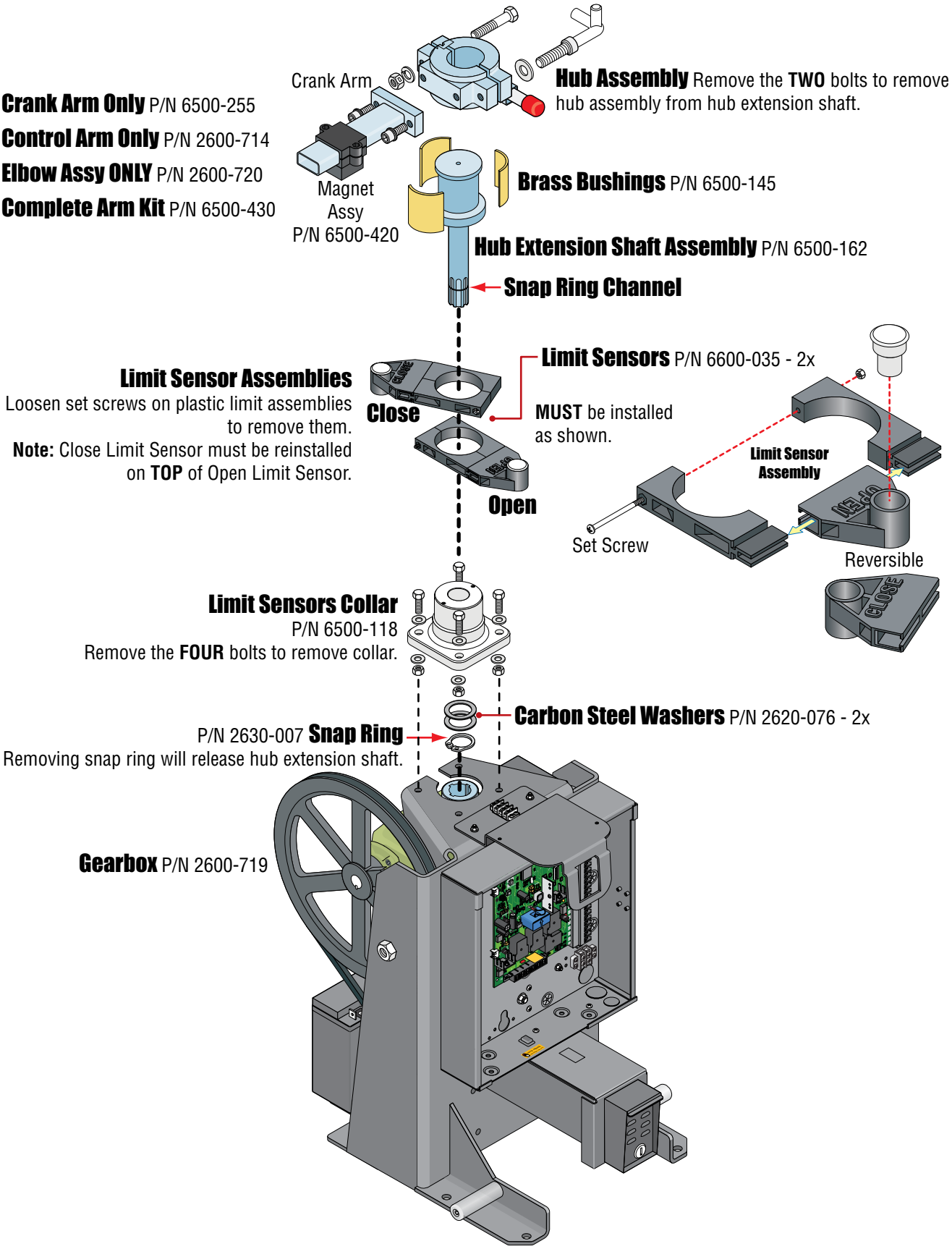

Model 6524-381 Solar Input Power

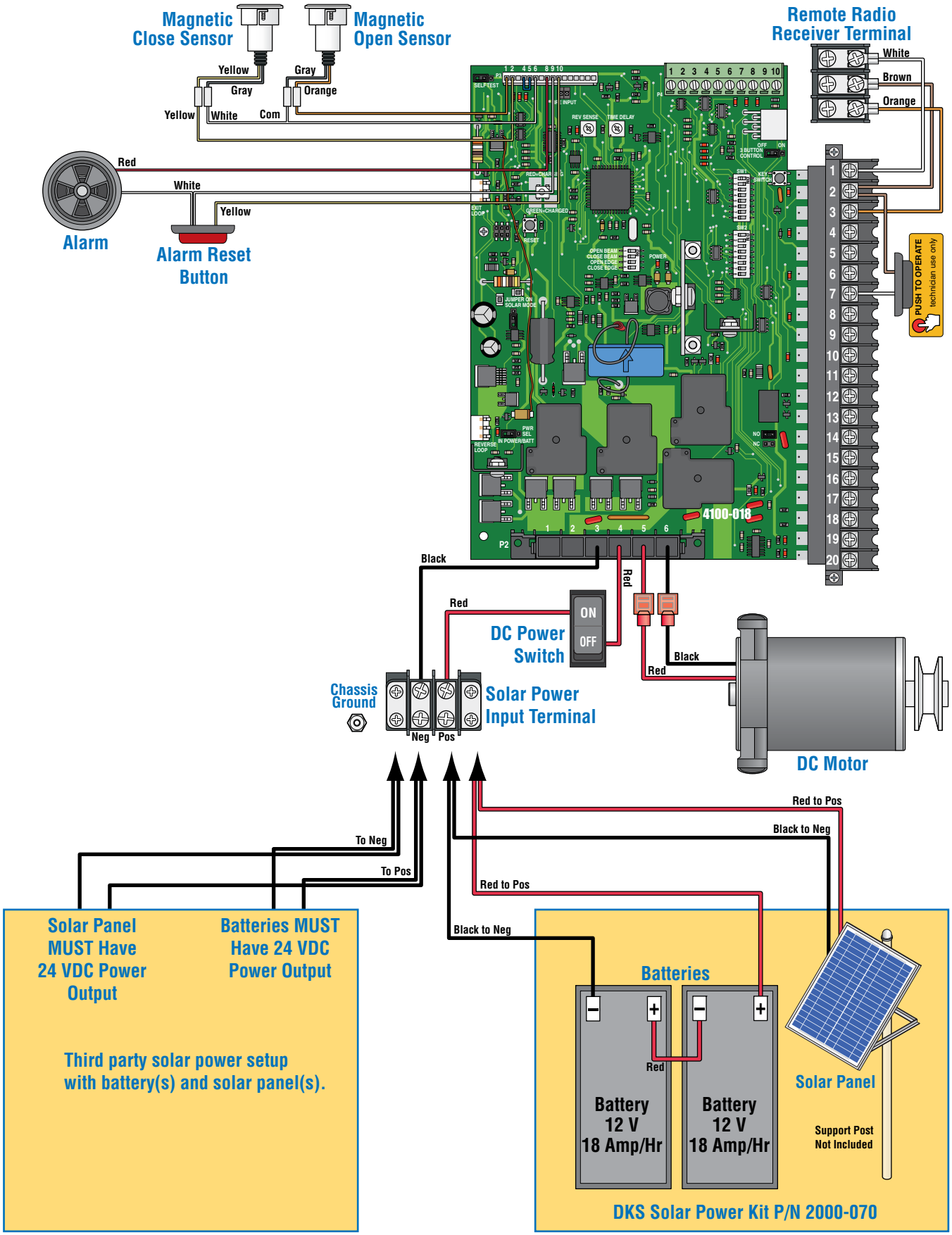

SECTION 7 - OWNER OF THE GATE OPERATOR

7.1 Alarm Sounding OR "Chirping" and Gate WILL NOT Operate

Operator is in a HARD Shutdown Condition: The alarm will sound for (5) five minutes. After five minutes the alarm will start "Chirping" every 5 seconds and continue "Chirping" until operator gets reset.

A KEY has been supplied that will unlock the power switch cover on this gate operator.

Note: The **owner** of the gate operator is responsible for the **KEY** availability.

When Alarm is Sounding OR "Chirping" . . . . .

ALWAYS CHECK THE ENTIRE GATE AREA FOR ANY OBSTRUCTIONS OR DAMAGE FIRST.

- If a Fire Dept Access Device has been activated by **emergency personnel**, then operator can be **reset** and put back into normal operation again. Alarm will **always** sound when this access device gets activated.
- If the cause of the alarm **CAN** be identified and **CORRECTED**, then operator can be **reset** and put back into normal operation again.
- If the cause of the alarm **cannot be corrected**, shut-off power and **DO NOT** place this operator back into service until the malfunction can be identified and **CORRECTED**.

IMPORTANT: Putting this gate operator back into service WITHOUT CORRECTING the cause of the alarm could result in severe injury or DEATH!

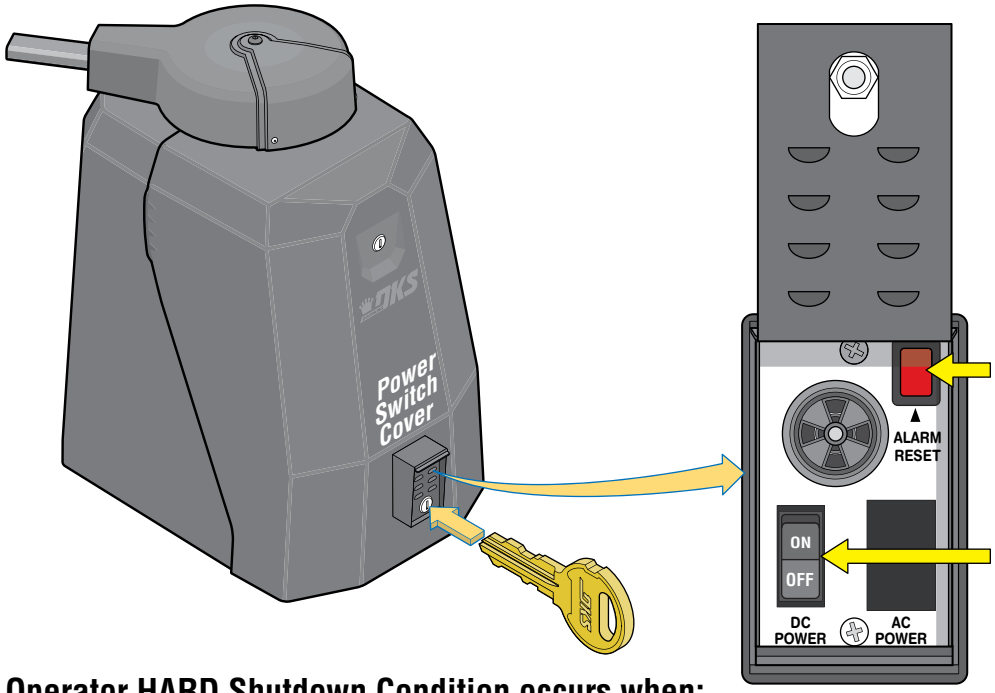

Reset Operator:

UNLOCK the power switch cover with **KEY.**
Press **RESET Button OR Cycle BOTH Power Switches OFF & ON**.

This will reset the gate operator and allow normal gate operation again.

Press RESET Button

OR

Cycle Power Switch

Operator HARD Shutdown Condition occurs when:

1. **Fire Department (Emergency Access) input has been activated by Police, Fire Department, EMT, Ambulance etc.**
2. **The inherent entrapment protection system (Type A) gets activated TWO consecutive times before the gate completes the open cycle OR the close cycle.**
3. **The reversing edge contact sensor (Type B2) gets activated and reverses, but before the gate completes the reverse cycle the inherent entrapment protection system (Type A) gets activated.**

Please read **SECTION 5 - OPERATING INSTRUCTIONS** for more information about operating this gate operator.

7.2 Manual Gate Operation

Caution: **NEVER attempt to manually operate the gate until you have VERIFIED that power to the gate operator has been SHUT-OFF!**

A KEY has been supplied that will unlock the cover and power switch cover on this gate operator.

Note: The **owner** of the gate operator is responsible for the **KEY** availability.

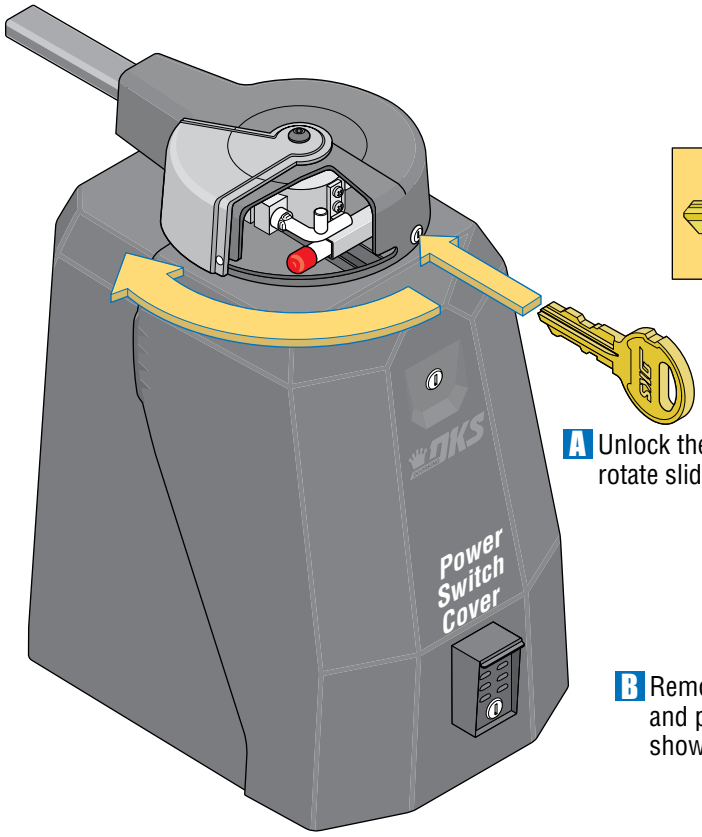

A Unlock the cover and rotate sliding door.

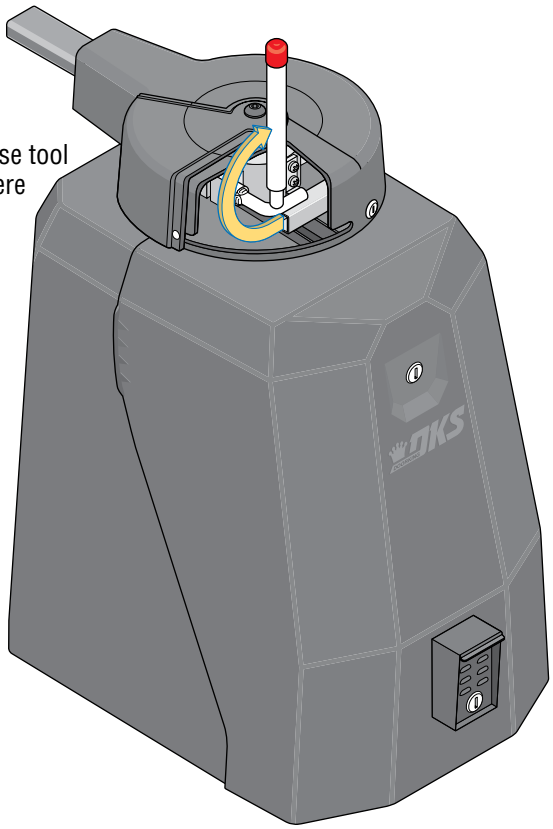

B Remove release tool and place where shown.

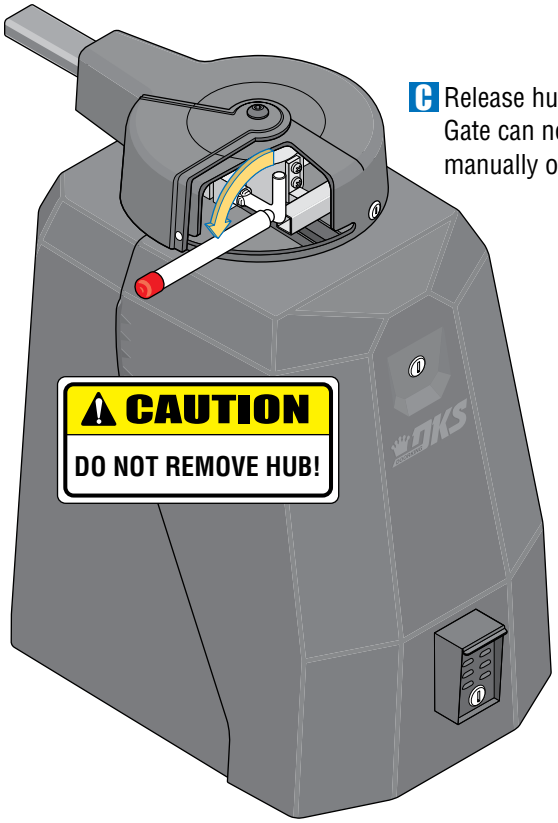

C Release hub. Gate can now be manually operated.

Please read **SECTION 5 - OPERATING INSTRUCTIONS** for more information about operating this gate operator.

7.3 Gate Operator's Monthly Checkup

Caution: Make SURE gate area is clear BEFORE testing the gate operator!

DO NOT repair or adjust gate systems yourself. Contact a trained gate systems technician with any questions or to make any repairs or adjustments. If you feel uncomfortable performing any of these inspections or testing, a qualified service technician will perform the visual inspections and testing for you.
You can find a trained service technician at DoorKing's "Dealer Locator" at www.doorking.com

Visual Inspection

Visually inspect the rollers, fasteners, brackets and other gate hardware for proper alignment, proper tightness, and signs of damage, breakage, looseness, rust or wear. Moving parts should be lubricated and should not be squeaking.
Visually inspect wiring for fraying or exposure. If a malfunction is found, contact a trained service technician to make adjustments or repairs.

Test Built-In Reversing Sensor

Begin with the gate in the fully **OPEN** position. Stand just outside the path of the gate and close the gate (typically auto-timer will time-out and close gate automatically). As the gate is **closing**, firmly press a solid object against the end of the gate frame in the direction opposing the travel of the gate. The gate should **stop** within 2 sec. and **reverse** to the **OPEN** position. Another input command is needed before the gate will reset and close again. Repeat this test while **opening** the gate. Start from the fully **CLOSED** position. While **opening**, gate should **stop** and **reverse** to the **CLOSE** position. If gate does **NOT** respond like it should in **either** direction of gate travel, contact a trained service technician to make adjustments or repairs.

Test Photo Sensors

If the gate has a photo sensing device protecting the path of a **closing gate**, perform the following test. Begin with the gate in the fully **OPEN** position. Stand just outside the path of the gate and close the gate (typically auto-timer will time-out and close gate automatically). Pass an object across the path of the closing photo sensing beam. The gate should **stop** within 2 sec. and **reverse** to the **OPEN** position. Typically the auto-timer times out and gate closes again.
If the gate has a photo sensing device protecting the path of a **opening gate**, start from the fully **CLOSED** position. **OPEN** gate. Pass an object across the path of the opening photo sensing beam. The gate should **stop,** the gate will resume opening when the beam is clear. If gate does **NOT** respond like it should in **either** direction of gate travel, contact a trained service technician to make adjustments or repairs.

Test Reversing Edges

If the gate has a reversing edge(s) protecting the path of a **closing gate**, perform the following test. Begin with the gate in the fully **OPEN** position. Stand just outside the path of the gate and close the gate. As the gate is closing, firmly press a solid object against the reversing edge in the direction opposing the travel of the gate. The gate should **stop** within 2 sec. and **reverse** to the **OPEN** position (typically auto-timer will time-out and close gate automatically). If the gate encounters **another** obstruction before it is closed, the gate will **stop** and reverse to the **OPEN** position **again**. A input command is needed before the gate will reset and close again, auto-timer will **NOT** close gate (Typically, press your remote button for input command).
If the gate has a reversing edge(s) protecting the path of a **opening gate**, starting from the fully **CLOSED** position.
Stand just outside the path of the gate and open the gate. **OPEN** gate. As the gate is opening, firmly press a solid object against the reversing edge in the direction opposing the travel of the gate. gate should **stop** and **reverse** to the **CLOSE** position. If gate does **NOT** respond like it should in **either** direction of gate travel, contact a trained service technician to make adjustments or repairs.

Note: This gate operator uses high levels of force to move the gate and most people underestimate the power of these systems and do not realize the potential hazards associated with this system if **NOT** maintained properly.
Scheduled maintenance visits are offered by most qualified service technicians to MAINTAIN your gate operator system.

7.4 New Installation Checklist for Installer and Property Owner

Instructions: Check the space next to each item ("✓") to indicate that it has been addressed by installer **AND** property owner. If it is not applicable, enter N/A. Please note that the checklist is intended to be a summary of many **important** automated vehicular gate aspects, **But may not inclusively identify all potential hazards of every specific gate system installation.**

Each item listed and checked has been examined by the Installer and is CLEARLY understood by the Property Owner.

Installer	Property Owner	Description
		The operator is installed on a gate used for vehicles only. Verify that separate pedestrian access is provided or available, and the access is such that pedestrians cannot come in contact with the moving vehicular access gate during its entire length of travel.
		Gate/Hardware: Insure that there is a means to prevent the gate from falling over in the event of a roller or hinge failure. Insure the gate has physical limit stops and that gravity will not initiate motion of the gate. Insure that all rollers are guarded or covered to eliminate the possibility of a finger being inserted between the roller and gate.
		Slide Gate: Insure that the maximum opening in the gate and in that portion of the adjacent fence that the gate covers when the gate is in the open position is such that a 2 ¼" sphere cannot pass through the openings up to 72 inches above the ground or to the top of the gate, whichever is less. If the gate and adjacent fence do not meet this requirement, wire mesh (or other means) must be added to meet this requirement before placing the gate system in operation. Insure that any gaps between the slide gate and stationary posts/pilasters is less than 2 1/4" and that these areas are protected with an entrapment protection device.
		The gate operator system is in compliance with the **entrapment protection requirements of UL 325.** Identify all potential entrapment zones and ensure they are protected. Potential pinch areas have been guarded so as to be inaccessible OR have a contact (reverse edge) and/or non-contact (photocell) obstruction sensing devices installed. Verify that the system has in place external entrapment protection, independent from the inherent entrapment protection. Edge sensors or photocells are typical, other means are possible. For more information see your **specific** installation/owners manual for entrapment protection installation and locations.
		The installer has properly adjusted the **inherent entrapment protection feature** on the gate operator, and has tested the gate to make sure that the gate stops and reverses a short distance upon striking an immovable object.
		Check that placement of **user operational controls** are six (6) or more feet away from the gate. If any operational control is closer than six (6) feet to the gate, **DO NOT** place the automated vehicular gate into service.
		Warning signs are to be permanently installed in the area of the gate in such a manner that at least one warning sign is visible by persons located on each side of the gate, for both the secure and unsecure sides of the gate.
		The installer has instructed the property owner in the **proper use of the gate operator** and has reviewed the operational functions, obstruction-sensing devices, alarm, and reset as outlined in **your specific** installation/owners manual.
		The installer has instructed the property owner in the proper use of the operator's **manual release feature** as outlined in **your specific** installation/owners manual.
		The installer has **reviewed all safety instructions with the property owner**, including the need to never let children operate or play with gate controls, to keep the remote control away from children, and to always keep people and objects away from the gate.
		The installer has explained to the property owner that a **regular maintenance schedule** for both the gate and the gate operator is recommended, including regular testing of entrapment protection as outlined in the manufacturer's instructions.
		The installer has left the installation/owners manual with the property owner for future reference.

Alarm Sounding OR "Chirping" and Gate WILL NOT Operate

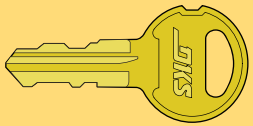

A KEY has been supplied that will unlock the power switch cover on this gate operator.

To obtain key to unlock gate operator contact:

Name _____

Phone # _____

Operator is in a HARD Shutdown Condition: The alarm will sound for (5) five minutes. After five minutes the alarm will start "Chirping" every 5 seconds and continue "Chirping" until operator gets reset.

When Alarm is Sounding OR "Chirping" .....

ALWAYS CHECK THE ENTIRE GATE AREA FOR ANY OBSTRUCTIONS OR DAMAGE FIRST.

- If a Fire Dept Access Device has been activated by **emergency personnel**, then operator can be **reset** and put back into normal operation again. Alarm will **always** sound when this access device gets activated.
- If the cause of the alarm **CAN** be identified and **CORRECTED**, then operator can be **reset** and put back into normal operation again.
- If the cause of the alarm **cannot be corrected**, shut-off power and **DO NOT** place this operator back into service until the malfunction can be identified and **CORRECTED**.

IMPORTANT: Putting this gate operator back into service WITHOUT CORRECTING the cause of the alarm could result in severe injury or DEATH!

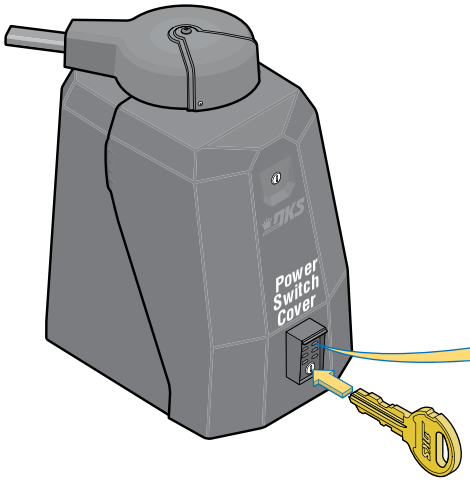

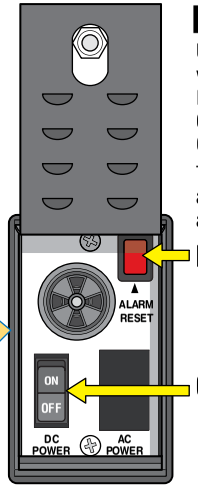

Reset Operator:

UNLOCK the power switch cover with **KEY.**
Press **RESET Button OR Cycle BOTH Power Switches OFF & ON.**

This will reset the gate operator and allow normal gate operation again.

Press RESET Button

OR

Cycle Power Switch

Operator HARD Shutdown Condition occurs when:

1. **Fire Department (Emergency Access) input has been activated by Police, Fire Department, EMT, Ambulance etc.**
2. **The inherent entrapment protection system (Type A) gets activated TWO consecutive times before the gate completes the open cycle OR the close cycle.**
3. **The reversing edge contact sensor (Type B2) gets activated and reverses, but before the gate completes the reverse cycle the inherent entrapment protection system (Type A) gets activated.**

Please read **SECTION 5 - OPERATING INSTRUCTIONS** for more information about operating this gate operator.

Manual Gate Operation

Caution: **NEVER attempt to manually operate the gate until you have VERIFIED that power to the gate operator has been SHUT-OFF!**

Please read **SECTION 5 - OPERATING INSTRUCTIONS** for more information about operating this gate operator.

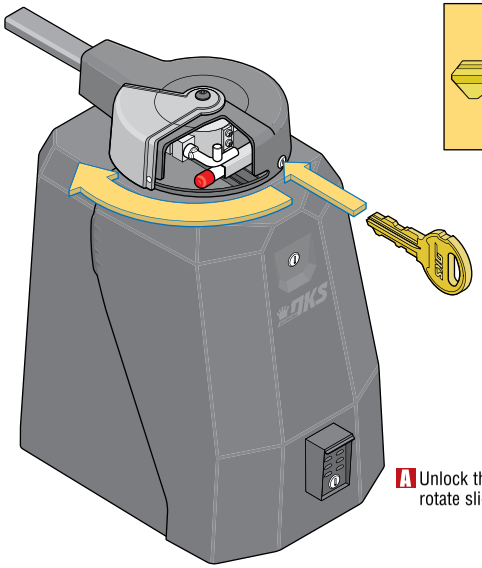

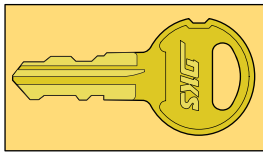

A KEY has been supplied that will unlock the cover and power switch cover on this gate operator.

To obtain key to unlock gate operator contact:

Name _____

Phone # _____

A Unlock the cover and rotate sliding door.

B Remove release tool and place where shown.

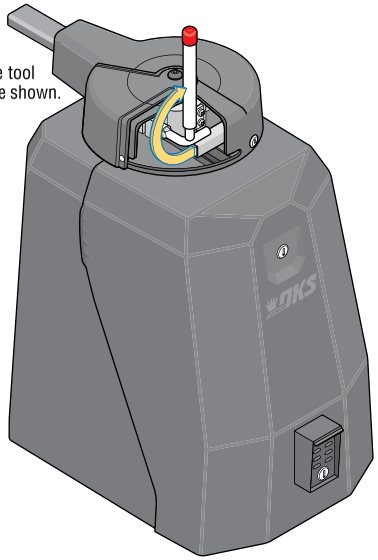

C Release hub. Gate can now be manually operated.

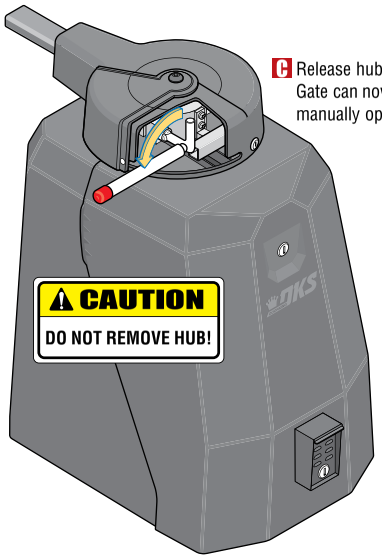

www.doorking.com to get a PDF of this manual - Remove this page OR print this page in color, fold and laminate - Place at the gate operator

Installation/Owner's Manual

Model 6524-381

Solar Powered Vehicular Swing Gate Operator

Use this manual for circuit board 4100-018 Revision A or higher.

6524-066-G-7-26

For AC Power, See 6524-065 AC Power Manual

Entrapment Protection must be provided for the gate system where the risk of entrapment or obstruction exists. The operator will NOT run without one or more monitored type B1 or B2 entrapment protection devices in EACH entrapment area.

UL 325 August 2018 Standard

Bi-Parting Gate Operators CANNOT be used with Solar Applications.

THIS PRODUCT IS TO BE INSTALLED AND SERVICED BY A TRAINED GATE/DOOR SYSTEMS TECHNICIAN ONLY.
Visit **www.doorking.com/dealer-locator** to find a professional installing and servicing dealer in your area.

www.doorking.com

DoorKing, Inc.
120 S. Glasgow Avenue
Inglewood, California 90301
U.S.A.

Phone: 310-645-0023
Fax: 310-641-1586