# Section C1

## Product Reference Guide - January 2026

# Maximum Security Operators & Barriers

| Date | Page | Comment |
|---|---|---|
| 1-1-26 | All | Reference guide published. |
| 3-11-26 | 7 | Clarified power input note at top of each column. |
| 6-15-26 | 11, 13 | Corrected part numbers under items 3 and 4 on both pages. |
| 6-23-26 | 10 - 13 | Simplified different arm configurations and choices available. |
| | | |
| | | |
| | | |
| | | |
| | | |
| | | |
| | | |
| | | |
| | | |
| | | |
| | | |
| | | |
| | | |
| | | |
| | | |
| | | |
| | | |
| | | |
| | | |

## Maximum Security Gate Operators

9500 series operators are designed to operate very large vehicular gates used in Limited (Class III) and Restricted (Class IV) maximum security applications only. These operators must never be used in Residential (Class I) or Commercial (Class II) applications, or in any application where the gate is operated by the General Public.

These operators must be installed with external entrapment prevention devices, Type B1 (non-contact) or Type B2 (contact), or a combination of both to ensure all entrapment hazard areas are protected. **9500 Series operators require a minimum of one (1) Type B1 or B2 AND one (1) Type B1 or B2 in EACH direction of travel.** Refer to the Installation Manual for important safety information.

## Minimum Gate Length

The 9500 Series operators have variable speed capability which allows the user to adjust the speed of the gate. On most operators, the speed can be set for speeds up to 2 Ft/sec., and on certain models the gate speed can be set up to 4 Ft/sec. When using these higher speeds, there is a time factor to consider during the start-up and the slow-down of the gate. For this reason, you will see a minimum gate length on operators design to move a gate at higher speeds.

## 1620 Series Lane Barriers

1620 Lane Barriers are NOT crash rated. They are intended to provide a formidable barrier to help prevent passenger cars and light-duty pickup trucks from breaching a parking arm operator system. These barriers are not a stand-alone product, they are designed to be mechanically linked to a 1603-580 lane barrier operator.

## 1625 Series Wedge Barriers

1625 Wedge Barriers are crash rated to the ASTM F2656-23 standard. Wedge barriers are intended to provide a formidable barrier to help prevent passenger cars and light-duty pickup trucks (up to 5,070 Lbs) from breaching a standard parking arm operator system. These barriers are not a stand-alone product, they are designed to be mechanically linked to a 1602-590 operator.

# UL 325 – February 2023

Requirements mandated by the safety standard (UL 325) that DKS gate operators are listed to require that photo-beams and contact edges used for entrapment protection must be monitored. Entrapment protection must be provided for the gate system where the risk of entrapment exists. The gate operator will not run without one or more external entrapment protection devices installed in each direction of travel. Check the gate operator installation manual for a list of external entrapment protection devices that can be used with DKS gate operator products.

The August 2018 update to the safety standard requires that a minimum of two independent means of entrapment protection must be provided, in each direction of travel, where the risk of entrapment exists. The actual number of external devices required is dependent on the gate system layout and the number of entrapment areas that will need to be protected. Installers will have to identify all potential areas where the risk of entrapment exists and how best to protect those areas. For example, some gates may require two (or more) external devices in each direction of travel to protect all potential areas of entrapment. **9500 Series operators require a minimum of one (1) Type B1 AND one (1) Type B2 in EACH direction of travel.**

There is an exception for swing gates and vertical lift gates regarding the minimum of two entrapment protection devices in each direction of travel. For example, if on a swing gate system there is no potential for entrapment in the opening direction, then only the close direction will require a minimum of two means of entrapment protection. Installers will have to determine if any entrapment hazards exist in the opening direction, and if so, then those areas will have to be protected with external devices.

Vertical lift gates require two means of entrapment protection in the down cycle but will only require one means of entrapment protection in the up cycle. Model 1175 is considered to be a vertical lift gate operator for entrapment protection means requirements.

Barrier gate operators that are installed in such a way that the barrier arm does not come closer than 16 inches to a rigid object are not required to protect against entrapment.

The table below shows the minimum entrapment protection requirements for each type of gate operator in the scope of the UL 325 Standard for Safety.

| | Opening | Closing |
|---|---|---|
| Horizontal Slide Gate | 2 | 2 |
| Horizontal Swing Gate | 2* | 2* |
| Vertical Pivot Gate | 2 | 2 |
| Vertical Lift gate | 1 | 2 |
| Horizontal Bifold Gate | 2 | 2 |
| * For a horizontal swing gate operator, at least two independent entrapment protection means are required in each direction of travel. Except, if there is no entrapment zone in one direction of travel, only one means of entrapment protection is required in that direction of travel; however, the other direction must have two independent entrapment protection means. | | |

# Blank Page

# Table of Contents

**Heavy-Duty Maximum Security Slide Gate Operators**

9500 Series ..... 6

**Maximum Security Slide Gate Operator Accessories**

9500 Series ..... 8

Heavy-Duty V-Wheel Assemblies ..... 9

**Lane Barriers**

1620 Series ..... 10

**Wedge Barriers**

1625 Series ..... 12

# 9500 Series

## Heavy-Duty Maximum Security Slide Gate Operators

- Plug-in Loop Detector Ports
- Built-in power and reset switches
- Two 115 VAC convenience outlets
- Partial open / anti-tailgate feature
- Variable Speed
- 20-Feet minimum gate width (6.1m)
- Gate tracker data output
- Selectable stop/ reverse function

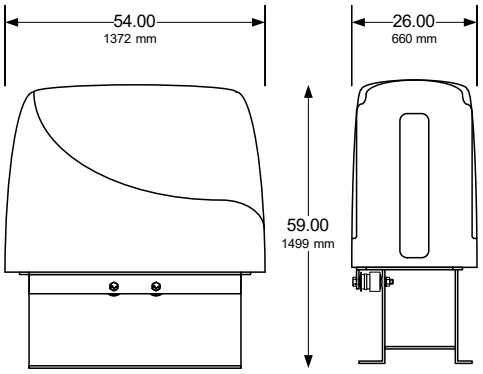


95xx-xxx with Standard Polyurethane housing

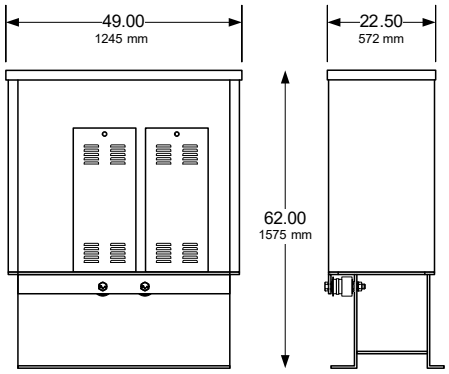


95xx-xxx with optional 10ga. Steel housing

| Model | Chain | Speed Variable | Maximum Gate Weight[1] | Maximum Gate Length | Minimum Gate Length | Class of Operation[2] | Voltage VAC | HP | Gearbox Ratio | Magnetic Brake | Power Outlets | Loop Ports[3] |
|---|---|---|---|---|---|---|---|---|---|---|---|---|
| 9550 | #100 | 1-2 Ft/sec .3-.6m/sec | 15,000 (6803 Kg) Lb[4] 9,000 (4082 Kg) Lb[5] | 160 Ft 48m | 20 Ft 6.1m | III, IV | 208, 230, 460 | 5 | 30:1 | Option | 2 | 2 |
| 9555 | #100 | 1-2 Ft/sec .3-.6m/sec | 15,000 (6803 Kg) Lb[4] 9,000 (4082 Kg) Lb[5] | 160 Ft 48m | 20 Ft 6.1m | III, IV | 208, 230, 460 | 5 | 10:1 | Standard | 2 | 2 |
| 9570 | #100 | 1-2 Ft/sec .3-.6m/sec | 25,000 (11,339 Kg) Lb[4] 15,000 (6803 Kg) Lb[5] | 160 Ft 48m | 20 Ft 6.1m | III, IV | 208, 230, 460 | 7.5 | 30:1 | Option | 2 | 2 |
| 9575 | #100 | 1-2 Ft/sec .3-.6m/sec | 25,000 (11,339 Kg) Lb[4] 15,000 (6803 Kg) Lb[5] | 160 Ft 48m | 20 Ft 6.1m | III, IV | 208, 230, 460 | 7.5 | 10:1 | Standard | 2 | 2 |
| 9590 | #100 | 1-2 Ft/sec .3-.6m/sec | 28,000 (12,700 Kg) Lb[4] 16,800 (7620 Kg) Lb[5] | 160 Ft 48m | 20 Ft 6.1m | III, IV | 208, 230, 460 | 10 | 30:1 | Option | 2 | 2 |
| 9595 | #100 | 1-2 Ft/sec .3-.6m/sec | 28,000 (12,700 Kg) Lb[4] 16,800 (7620 Kg) Lb[5] | 160 Ft 48m | 20 Ft 6.1m | III, IV | 208, 230, 460 | 10 | 10:1 | Standard | 2 | 2 |

1. Assumes gate to be in good mechanical condition running on a level plane.
2. III = Limited Access; IV = Restricted Access.
3. Plug-in loop detector ports; open and reverse. DoorKing plug-in loop detectors only.
4. When using 3$^{\phi}$ power.
5. When using 1$^{\phi}$ power.

All 9500 Series operators come standard with the polyurethane housing. The 10 Ga. steel housing is optional.



Specifications subject to change without notice.

# 9500 Series

## Heavy-Duty Maximum Security Slide Gate Operators

All orders for 9500 Series operators must be coordinated through the Regional Sales Manager. DoorKing order entry personnel will not enter the order into our manufacturing system until the RSM has approved the order. **Distributors must place orders through their RSM to confirm pricing.**

**For any product that requires modification to meet project specifications, written instructions and specifications are required from the contractor before production begins.**

**Operators will not run without external entrapment protection devices connected to the controller board. A minimum of two (one in each direction of travel) is required. See the installation manual for more information.**

These operators are built to order and are not in finished goods inventory. Expect up to four weeks' lead-time for delivery of these products. Operators come standard with the polyurethane housing. 10 Ga. steel housing is optional.

### 95x0 Operators – 30:1 Gearbox

*VF AC Drive Assembly - 30:1 Gearbox.*

***Operators can be built for $1^{\emptyset}$ or $3^{\emptyset}$ power input – specify which.***

#### 9550

9550-380 5 HP, 208V[2]

9550-381 5 HP, 230V[2]

9550-382 5 HP, 460V

#### 9570

9570-380 7.5 HP, 208V[2]

9570-381 7.5 HP, 230V[2]

9570-382 7.5 HP, 460V

#### 9590

9590-380 10 HP, 208V[2]

9590-381 10 HP, 230V[2]

9590-382 10 HP, 460V

### Options 95x0 Operators Only

9550-206 Steel Housing w/Access Door[1]

4001-101 Transformer[2]

2601-440 Magnetic Brake[3]

2601-441 Magnetic Brake[4]

*1. Replaces the polyurethane housing with a 10 Ga. steel housing. Includes manual gate operation access door.*

*2. 4001-101 transformer is required if source power is 208 or 230 Volt single-phase.*

*3. Use with 7.5 and 10 HP units.*

*4. Use with 5 HP units.*

### 95x5 Operators 10:1 Gearbox

*VF AC Drive Assembly - Magnetic Brake - 10:1 Gearbox.*

***Operators can be built for $1^{\emptyset}$ or $3^{\emptyset}$ power input – specify which.***

#### 9555

9555-380 5 HP, 208V[2]

9555-381 5 HP, 230V[2]

9555-382 5 HP, 460V

#### 9575

9575-380 7.5 HP, 208V[2]

9575-381 7.5 HP, 230V[2]

9575-382 7.5 HP, 460V

#### 9595

9595-380 10 HP, 208V[2]

9595-381 10 HP, 230V[2]

9595-382 10 HP, 460V

### Options 95x5 Operators Only

9550-205 Steel Housing[1]

4001-101 Transformer[2]

*1. Replaces the polyurethane housing with a 10 Ga. steel housing.*

*2. 4001-101 transformer is required if source power is 208 or 230 Volt single-phase.*

# 9500 Series

## Accessories

### Chain

2601-272 #100 Chain, 20-Ft (6 m)

### Accessories

2601-270 Chain Tray kit 10-Ft (3 m)

1601-197 Heater Kit 208/230 VAC[1]

1601-198 Heater Kit 480 VAC[1]

*1. Use if temperature routinely falls below 10°F (-12°C).*

### Entrapment Protection (required) Devices

*Use Type B1 (non-contact) and/or Type B2 (contact) entrapment protection devices to protect all areas where the risk of entrapment exist - see Section A1, pages 46-47.*

***Operator will not run without external entrapment protection devices connected to the controller board. Minimum of two (one in each direction of travel) is required. See installation manual for more information.***

### Loops and Loop Detectors

*See Section A1, page 48 for a complete list of all loop detectors, prefabricated loops and loop accessories available.*

# Slide Gate Accessories

## Heavy-Duty V-Wheel Assemblies

The tandem and quad wheel assemblies are designed for extremely heavy gates. The tandem and quad assemblies distribute the gate weight across a wider area of the gate track. A critical component of these very heavy gates is the track that the gate rolls on. **The track must be of a hardened material capable of supporting these extreme weights.**

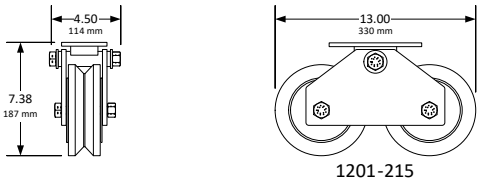


1201-215

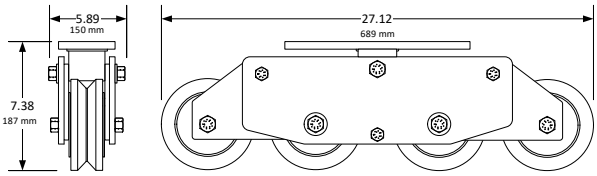


1201-250

**Heavy-Duty V-Wheel Assemblies**

1201-215

6-Inch (152 mm) Heavy-Duty Tandem V-Wheel Assembly

- Assembly is rated for 7,000 lb (3,175 Kg). Maximum gate weight is 14,000 lb (6,350 Kg) - two (2) assemblies required per gate. **With this configuration, each wheel (4 total) is supporting 3,500 lb (1,587 Kg).**

1201-250

6-Inch (152 mm) Heavy-Duty Quad V-Wheel Assembly

- Assembly is rated for 14,000 lb (6,350 Kg). Maximum gate weight is 28,000 lb (12,700 Kg) - two (2) assemblies required per gate. **With this configuration, each wheel (8 total) is supporting 3,500 lb (1,587 Kg).**

**Heavy-Duty Replacement V-Wheel**

1202-000

6-Inch (152 mm) Heavy-Duty Replacement V-Wheel

- 3500 Lb. (1587 Kg) maximum weight

# 1620 Lane Barrier - Red

## Traffic Control Automated Barrier

The 1620 Lane Barrier is NOT a crash rated device. It is intended to provide a formidable barrier to help prevent passenger cars and light-duty pickup trucks from breaching the standard parking arm operator system. These lane barriers are not a stand-alone product, they are designed to be mechanically linked to and connected to the 1603-580 lane barrier operator. Required items; 1620-xxx lane barrier, 1603-580 lane barrier operator and octagonal aluminum arm components are ordered separately.

**Caution: Installation and use of lane barriers in areas that are subject to freezing weather with potential for snow and ice accumulation is not recommended.**

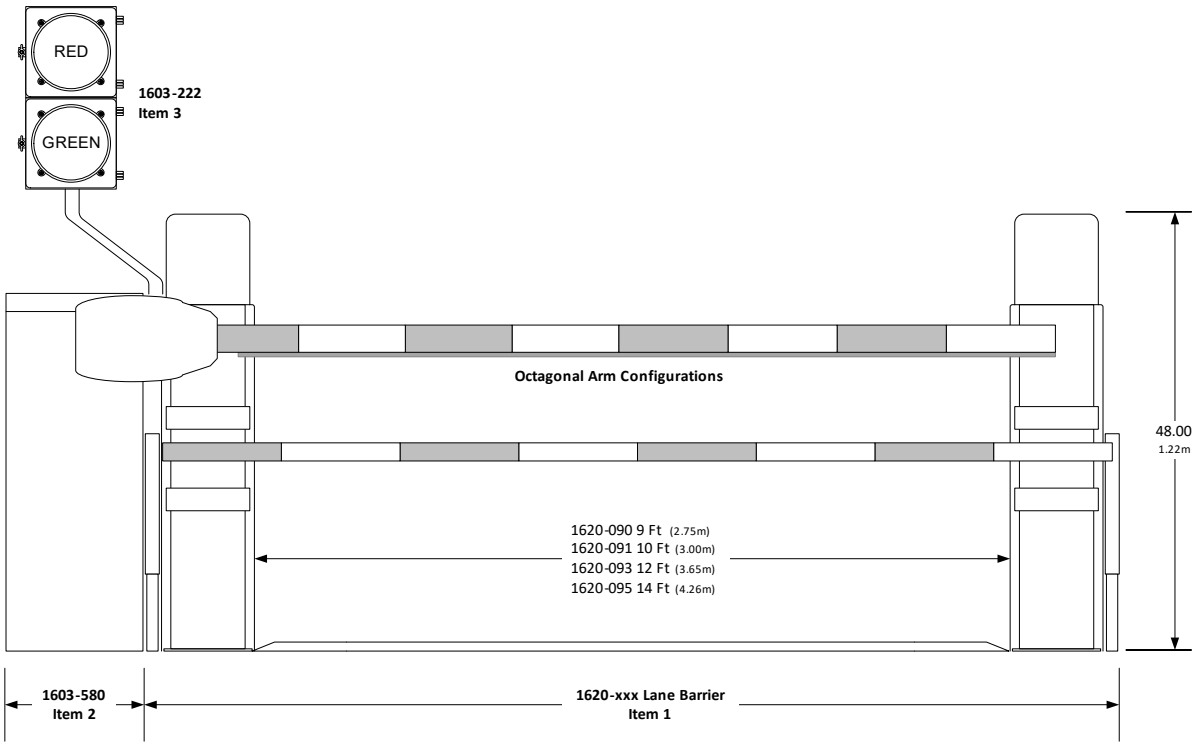


| P/N | Lane Opening | Overall Dimensions (Item 1 + Item 2) | | |
|---|---|---|---|---|
| | | Height | Width | Depth |
| 1620-090 | 9 Ft. | 48 In. | 13 Ft., 6 In. | 5 Ft. |
| 1620-091 | 10 Ft. | 48 In. | 14 Ft., 6 In. | 5 Ft. |
| 1620-093 | 12 Ft. | 48 In. | 16 Ft., 6 In. | 5 Ft. |
| 1620-095 | 14 Ft. | 48 In. | 18 Ft., 6 In. | 5 Ft. |

1. The 1620 Lane Barrier IS NOT a stand-alone product. It must be used with the 1603-580 Lane Barrier Operator.
2. 1620 Lane Barrier is not crash rated.
3. Traffic signal kit (1603-222) MUST be installed with the 1620 system.
4. Must use octagonal barrier arm (1601-555, 1601-567 or 1601-812).
5. Lane barrier anchor posts are finished in gloss cardinal red.
6. Designed for use with passenger cars and light trucks.

**WARNING! LTL Carriers are now charging additional fees for any shipment that is eight (8) feet in length or greater. These fees can be substantial.**

# 1620 Lane Barrier - Red

## Traffic Control Automated Barrier

1620 Lane Barrier system components are ordered à la carte. (ITEM 1) Lane barrier; (ITEM 2) Lane barrier operator; (ITEM 3) Traffic signal. Choose an arm configuration (CONFIG 1 - 4)

Lane barrier components are finished in Gloss Cardinal Red. 1603-580 lane barrier operator is finished in Gloss White.

**ITEM 1: 1620 Lane Barrier[1] – Cardinal Red**

1620-090 Lane Opening 9 Ft (2.75m)

1620-091 Lane Opening 10 Ft (3.00m)

1620-093 Lane Opening 12 Ft (3.65m)

1620-095 Lane Opening 14 Ft (4.26m)

*1. Width shown is the distance between the post anchors.*

**ITEM 2: Lane Barrier Operator**

1603-580 Lane Barrier Operator

2600-266 High Voltage Kit[1]

*1. Allows operator to be powered from 208, 230, 460 or 575 VAC.*

**ITEM 3: Traffic Signal**

1603-222 Traffic Signal 12 VDC w/35" Post

**CONFIG 1: Octagonal Arm**

1601-555 Arm 14 Ft (4.27m)

1601-567, 2-piece (optional)[1]

1601-242 Hardware Kit[2]

*1. Ships in 8-ft (2.4m) long box to reduce shipping cost.*

*2. Required.*

**CONFIG 2: Octagonal Arm - Folding**

1601-812 Folding Arm Kit 12 Ft (3.66 m)[1]

1601-242 Hardware Kit[2]

8080-922 Reverse Edge Kit Lighted (optional)

*1. Minimum ceiling height is 10-ft (3.04m)*

*2. Required.*

**CONFIG 3: Octagonal Arm with Reverse Edge**

1601-555 Arm 14 Ft (4.27m)

1601-567, 2-piece (optional)[1]

8080-235 Hardware Kit[2]

8080-605 Reverse Edge 5 Ft[3]

8080-606 Reverse Edge 6 Ft[3]

8080-609 Reverse Edge 9 Ft[3]

8080-612 Reverse Edge 12 Ft[3]

*1. Ships in 8-ft (2.4m) long box to reduce shipping cost.*

*2. Required*

*3. Edge must be at least 2-Ft shorter than the overall arm length.*

**CONFIG 4: Octagonal Arm with Lighted Reverse Edge**

1601-555 Arm 14 Ft (4.27m)

1601-567, 2-piece (optional)[1]

8080-235 Hardware Kit[2]

8080-905 Reverse Edge 5 Ft Lighted[3,4]

8080-906 Reverse Edge 6 Ft Lighted[3,4]

8080-909 Reverse Edge 9 Ft Lighted[3,4]

8080-912 Reverse Edge 12 Ft Lighted[3,4]

*1. Ships in 8-ft (2.4m) long box to reduce shipping cost.*

*2. Required*

*3. Edge must be at least 2-Ft shorter than the overall arm length.*

*4. LED Green (Up) and Red (Down)*

# 1625 Wedge Barrier - Red

## Crash Rated Traffic Control Automated Wedge

The 1625 Wedge Barrier is crash rated to the ASTM F2656-23 standard. Wedges are intended to provide a formidable barrier to help prevent passenger cars and light-duty pickup trucks from breaching a standard parking arm operator system. These wedge barriers are not a stand-alone product, they are designed to be mechanically linked to and connected to a 1602-590 operator.

**Caution: Installation and use of wedge barriers in areas that are subject to freezing weather with potential for snow and ice accumulation is not recommended.**

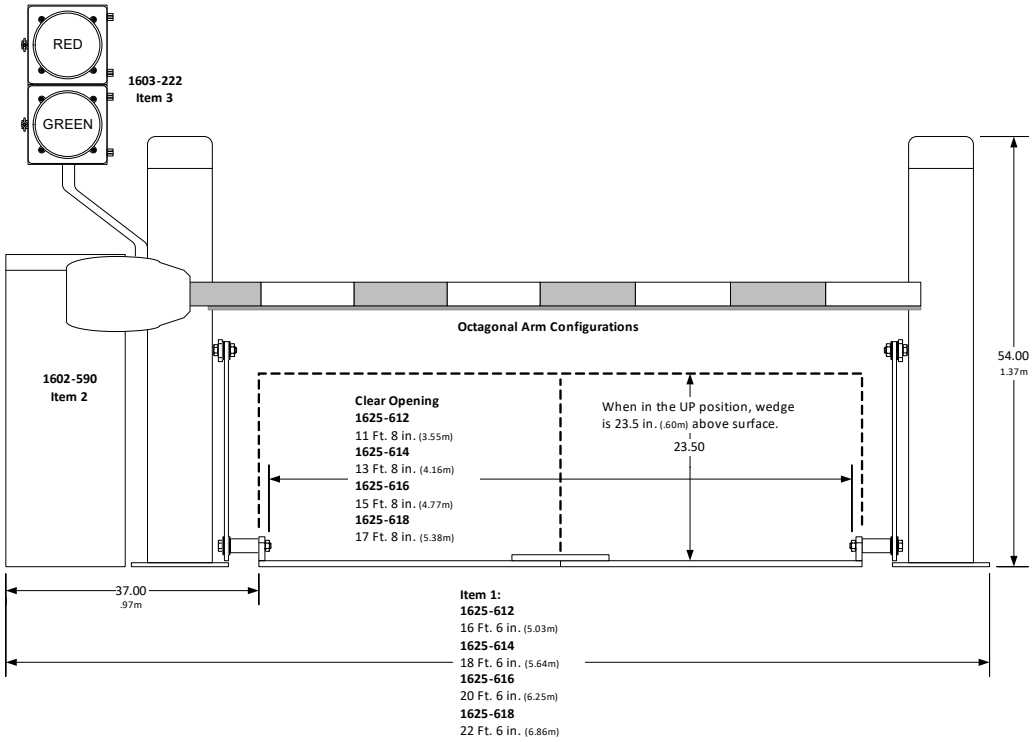


| P/N | Lane Opening | Overall Dimensions (Wedge + Post + Operator) | | | Crash Rating |
|---|---|---|---|---|---|
| | | Height | Width | Depth | |
| 1625-612 | 11 Ft., 8 In. | 54 In. | 16 Ft., 6 In. | 5 Ft., 8 In. | PU-30-P1 |
| 1625-614 | 13 Ft., 8 In. | 54 In. | 18 Ft., 6 In. | 5 Ft., 8 In. | PU-30-P2 |
| 1625-616 | 15 Ft., 8 In. | 54 In. | 20 Ft., 6 In. | 5 Ft., 8 In. | PU-30-P2 |
| 1625-618 | 17 Ft., 8 In. | 54 In. | 22 Ft. 6 In. | 5 Ft., 8 In. | PU-30-P2 |

1. 1625 Wedge Barriers ARE NOT a stand-alone product. They must be used with a 1602-590 Operator.
2. Traffic signal kit (1603-222) MUST be installed with the 1625 system.
3. Use 14 Ft. arm with 12 and 14 Ft. wedges and 17 Ft. arm with 16 and 18 Ft. wedges (17 Ft. arm can be used with the 14 Ft. wedge if desired).
4. Wedge barrier is finished in gloss cardinal red.
5. Designed for use with passenger cars and light trucks and will stop a vehicle up to 5,070 Lb at 30 MPH when installed per the manufacturer's installation instructions.

**WARNING! LTL Carriers are now charging additional fees for any shipment that is eight (8) feet in length or greater. These fees can be substantial.**

# 1625 Wedge Barrier - Red

## Traffic Control Automated Wedge

1625 Wedge Barrier system components are ordered à la carte. (ITEM 1) Wedge barrier; (ITEM 2) Wedge barrier operator; (ITEM 3) Traffic signal. Choose an arm configuration (CONFIG 1 - 4)

Wedge barrier components are finished in Gloss Cardinal Red. 1602 operator is finished in Gloss White.

**ITEM 1: 1625 Wedge Barrier[1] – Cardinal Red**

1625-612 Lane Opening 12 Ft (3.65m)

1625-614 Lane Opening 14 Ft (4.26m)

1625-616 Lane Opening 16 Ft (4.87m)

1625-618 Lane Opening 18 Ft (5.48m)

*1. Width shown is the distance between the post anchors.*

**ITEM 2: Operator**

1602-590 Operator

2600-266 High Voltage Kit[1]

*2. Allows operator to be powered from 208, 230, 460 or 575 VAC.*

**ITEM 3: Traffic Signal**

1603-222 Traffic Signal 12 VDC w/35" Post

**CONFIG 1: Octagonal Arm**

1601-555 Arm 14 Ft (4.27m)

1601-567, 2-piece (optional)[1]

1602-303 3 Ft (.91m) Arm Extension[2]

1601-242 Hardware Kit[3]

*1. Ships in 8-ft (2.4m) long box to reduce shipping cost.*

*2. Used in combination with 1601-555 to create a 17 Ft (5.2m) arm.*

*3. Required.*

**CONFIG 2: Octagonal Arm - Folding**

1601-812 Folding Arm Kit 12 Ft (3.66 m)[1]

1601-242 Hardware Kit[2]

8080-922 Reverse Edge Kit Lighted (optional)

*1. Minimum ceiling height is 10-ft (3.04m)*

*2. Required.*

**CONFIG 3: Octagonal Arm with Reverse Edge**

1601-555 Arm 14 Ft (4.27m)

1601-567, 2-piece (optional)[1]

1602-303 3 Ft (.91m) Arm Extension[2]

8080-235 Hardware Kit[3]

8080-605 Reverse Edge 5 Ft[4]

8080-606 Reverse Edge 6 Ft[4]

8080-609 Reverse Edge 9 Ft[4]

8080-612 Reverse Edge 12 Ft[4]

*1. Ships in 8-ft (2.4m) long box to reduce shipping cost.*

*2. Used in combination with 1601-555 to create a 17 Ft (5.2m) arm.*

*3. Required*

*4. Edge must be at least 2-Ft shorter than the overall arm length.*

**CONFIG 4: Octagonal Arm with Lighted Reverse Edge**

1601-555 Arm 14 Ft (4.27m)

1601-567, 2-piece (optional)[1]

1602-303 3 Ft (.91m) Arm Extension[2]

8080-235 Hardware Kit[3]

8080-905 Reverse Edge 5 Ft Lighted[4,5]

8080-906 Reverse Edge 6 Ft Lighted[4,5]

8080-909 Reverse Edge 9 Ft Lighted[4,5]

8080-912 Reverse Edge 12 Ft Lighted[4,5]

8080-915 Reverse Edge 15 Ft Lighted[4,5]

*1. Ships in 8-ft (2.4m) long box to reduce shipping cost.*

*2. Used in combination with 1601-555 to create a 17 Ft (5.2m) arm.*

*3. Required*

*4. Edge must be at least 2-Ft shorter than the overall arm length.*

*5. LED Green (Up) and Red (Down)*

# Blank Page