Section A2

Product Reference Guide – January 2026

Telephone / Video Entry & Access Control Systems

Date	Page	Comment
1-1-26	All	Reference guide published.
1-6-26	31	Added 1984-010 wireless Wiegand baseboard and 2132-111 post mount adapter.
1-13-26	29	Editorial corrections.
1-30-26	30	Updated specification table.
7-14-26	31	Updated part numbers for the 2132 and 2137.
10-20-26	30 – 36	Rearranged 2108, 2112, 2132 and 2137 pages.
10-26-26	35, 37	Editorial errors corrected.
11-10-26	35, 37	Added 1984-010 expansion control board.
11-17-26	34, 36	Expansion board option error corrected.
11-17-26	35, 37	Corrected part number for Wiegand wireless kit for 2358 expansion boards.

Telephone Entry System Connection Options and Cloud Programming

DoorKing 1830 Series entry system connection options include the DoorKing Cloud as an added benefit at no additional cost. Using the DoorKing Cloud, you can program and manage your access system from any device (laptop, tablet, smartphone) with an internet connection – a dedicated PC is no longer needed. The DoorKing Cloud is included with Cellular, VoIP, DoIP and IM Server subscriptions.

For more information, please visit:
https://www.doorking.com/easy-connect/programming/cloud

4G-LTE Cellular Service (Plug & Play)

- Voice and Programming (wireless via the cellular network)
- DKS Cellular (subscription based service)

Internet (VoIP) Connection (Plug & Play)

- Voice and Programming (wired connection)
- DKS Internet or VoIP subscription service required
- Requires 1830-186 Network Adapter for programming[1]
- Requires 1815-578 VoIP adapter for DKS VoIP[1] or use third party VoIP adapter[2]
- Plug & Play for LAN and WAN connections 2334-080[3,4]

1: Subscription service.
2: DoorKing does not guarantee third party VoIP service. Third party VoIP subscription may be required.
3: Combines 1830-186, 1815-578 and Ethernet switch into a single enclosure.
*4: **IMPORTANT! When used with 1830 Series systems, the 1830 Series circuit board MUST be Revision Z or higher.***

Internet (VoIP) Connection (Manual IP Configuration)

- Voice and Programming (wired connection)
- Manual setup – requires 1830-185 Network adapter
- Manual setup required: determine Default Gateway, set your IP address, setup Port Forwarding, configure Firewall for access, order Static IP address from internet provider or setup DDNS host account
- Compatible with most VoIP providers[1]

1: DoorKing does not guarantee third party VoIP service. Third party VoIP subscription may be required.

Land Line Telephone Service[3] (POTS line, Cable or Fiber[1])

- Voice and Programming (wired connection)
- Programming options:
  - IM Server Modem (subscription based service)
  - Modem to Modem[2]

1: Not applicable if Cable or Fiber is a cloud based telephone service.
2: Not compatible with all modems. Requires phone line and modem at programming PC.
3: DoorKing does not recommend using POTS (Plain Old Telephone Service) as a connection option and does not guarantee modem connections as many phone company services and switches no longer support modem communications.

TTY Connection Options

- Allows hearing impaired persons to connect their TTY device to the telephone entry system.
- P/N 1830-310 is factory installed at time of order.
- P/N 1830-315 is an add-on device that can be added to the telephone entry system at any time.

Video Entry System Connection Options and Cloud Programming

DoorKing 2100 series video entry system databases are created, edited and stored in the DoorKing cloud, which requires a cloud account (monthly subscription). To create a cloud account, or add a new system to a current cloud account, go to:

https://dksdb.dksoftware.com/NewUserSignup.aspx?st=video

2100 series video entry systems require an internet connection to operate. There are two ways to make this connection:

Ethernet Connection

- This is a wired connection and preferred. Minimum upload speed of at least 3 MBs is required for proper operation.
- The 2132 and 2137 can be powered with PoE (PoE++ Type 3).
- DKS consumer factory support is included with the monthly subscription fee.

Cellular Service

- Requires a cellular connection kit (sold separately).
- There is a monthly fee for the cellular service in addition to the standard monthly subscription service fee.
- AT&T or T-Mobile available.

Smartphone Apps

- A DoorKing app is required to receive video calls on a smartphone. The apps are available for free download - Android on Google Play and for iPhone on the App Store.
- 2108 and 2112 – DoorKIng Resident App
- 2132 and 2137 – DoorKing Community App

Table of Contents

Telephone Entry & Access Control

Model 1802 6
Model 1808 8
Model 1810 10
Model 1812 12
Model 1816 14
Model 1819 16
Model 1833 18
Model 1834 20
Model 1835 22
Model 1837 24
Model 1838 26
Model 1838 Access Plus 28
Model 2108 Video Entry Systems 30
Model 2112 Video Entry Systems 32
Model 2132 Video Entry System 34
Model 2137 Video Entry System 36

Accessories

1830 Series Connection Options 38
Elevator Control 39
Tracker Expansion Boards 40
Wireless Kits for Tracker Expansion Boards 41
Telephone Entry Systems Mounting Kits 42
Utility Enclosures 43
Accessories 44
Replacement Components 45

1802 Telephone Entry System

Residential, Commercial

1802 / 1802 EPD

- Hands free full duplex voice communication
- Programmable Directory Codes (1-4 digits)
- 16-digit dialing
- Includes 16 VAC power transformer
- Backlit keypad and A-Z-CALL buttons (EPD only)

1802 AP (Access Plus) ONLY

- Control up to 8 entry points
- IP Addressable
- PC Programmable
- 2-Digit directory codes
- 20-digit dialing
- Includes 16 VAC power transformer

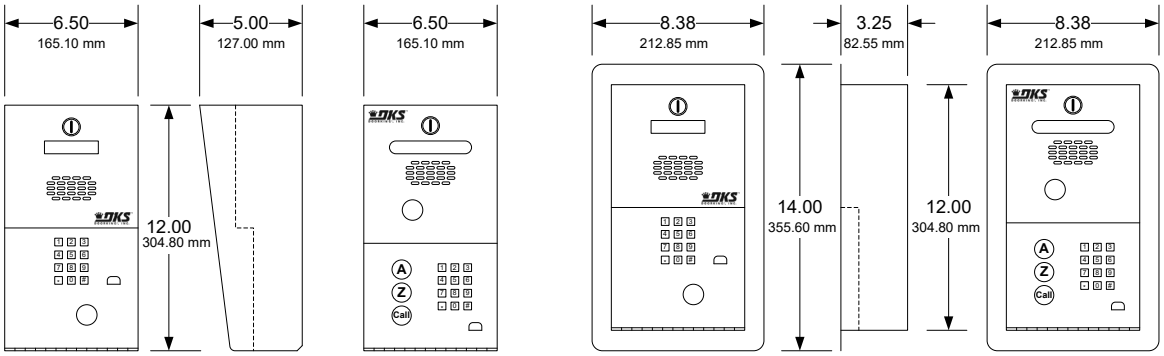

Model	Phone Numbers	Directory[6] Names	Entry Codes[1]	Device Codes[2]	Relays	Auxiliary Inputs[3]	Expansion[4]	Computer Programmable[5]	Temporary Codes	Holiday Schedules
1802	600	N/A	1000	0	2	1	No	No	5	No
1802EPD	100	100	100	0	2	1	No	No	5	No
1802AP[7]	27	N/A	0	100	2	2	6 Max	Yes	10	Yes

1. Entry codes are four (4) digits only and are not the same as device codes. Entry codes grant access when entered on the entry system keypad (or secondary keypad) only.
2. Device codes refer to any five (5) digit RS-485 device used to access an entry point, such as cards, transmitters or PINs (Personal Identification Number). Five (5) digit device codes can also be used on the system keypad.
3. 1802 and 1802EPD, auxiliary input allows a switch closure to activate relay 2, or can be set to auto-dial a preprogrammed telephone number. 1802 AP uses a standard RS-485 data input.
4. Six (6) additional entry points can be controlled via RS-485 card readers, AVID tag readers, RF receivers or digital keypads.
5. AP Programming software available for free download at doorking.com.
6. Single line 16 character 5/16 LCD display.
7. Access Plus model does not have any programming display or electronic directory.

Specifications subject to change without notice.

1802 Telephone Entry System

Residential, Commercial

1802 Telephone Entry Systems

1802-082 Surface Mount

1802-089 Flush Mount

1802-090 Surface Mount EPD

1802-091 Flush Mount EP

1802-092 Surface Mount AP (Access Plus)

1802-093 Flush Mount AP (Access Plus)

Service Connection Options

1800-081 Cellular Voice + Data[1,2]

1800-080 Cellular Voice + Data[1,3]

1815-578 VoIP Adapter[4]

1 - Cellular service plan required. See Section D1.

2 - Use with 1802 AP models.

3 - Use with 1802 and 1802 EPD models.

4 - DKS VoIP subscription required. See Section D1.

1802 Lobby Panels

1802-083 Surface Mount

1802-094 Flush Mount

Lobby panels can only be used with the 1816 or 1820 telephone intercom system. They cannot be connected directly to telephone service.

Accessories

1506-081 Secondary Keypad surface mount

1506-091 Secondary Keypad flush mount

1804-193 External Speaker

1801-008 Backup Battery 12-Volt .8 Ah

2600-588 Heater Kit *(1802, 1802 AP)*

2600-582 LCD Heater *(1802 EPD)*

1812-145 CCTV Color Camera

1807-012 Handset Kit *(surface mount only)*

1802-111 Post Mount Adapter Plate[1]

1. Required if mounting 1802 to gooseneck post.

1830-310 TTY Add-on Factory Installed

1830-315 TTY Add-on Kit

1802 AP (ACCESS PLUS ONLY) Expansion Options

2354-010 Conversion Board

1815-235 Conversion Board w/Enclosure

Converts 26-bit Wiegand to RS-485. Requires 12-16 VDC power.

1812-018 12-VDC, 1A Transformer

1200-080 Transformer Box

1816-083 Intercom Phone Expansion .....

The 1816-083 expands the "No Phone Line" telephone intercom interface on Access Plus systems from a single phone line up to 11 phone lines. The system can be further expanded to interface with up to a maximum of 23 phone lines.

RS-485 Card Readers (ACCESS PLUS ONLY)

1815-337 DK ProxPlus Secure .....

1815-332 DK Prox Reader .....

1815-232 ID Tech Reader.....

1815-233 AWID Reader

1815-234 HID Reader

RS-485 Keypads (ACCESS PLUS ONLY)

1513-081 Surface Mount

1513-082 Flush Mount

RS-485 RF Controls (ACCESS PLUS ONLY)

8053-080 MicroPlus Receiver

1808 Telephone Entry System

Residential, Commercial

1808

- Hands free full duplex voice communication
- Programmable Directory Codes (1-4 digits)
- 16-digit dialing
- Includes 16 VAC power transformer

1808 AP (Access Plus) ONLY

- Control up to 8 entry points
- IP Addressable
- PC Programmable
- 2-Digit directory codes
- 20-digit dialing
- Includes 16 VAC power transformer

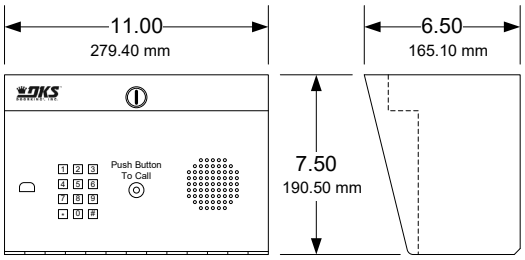

Surface Mount
1808

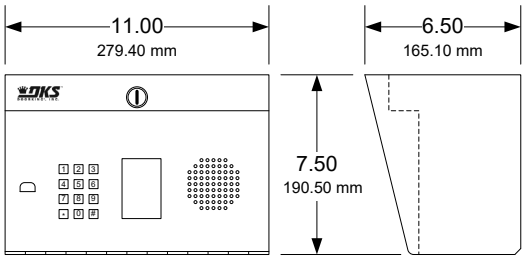

Surface Mount w/Directory
1808 / 1808 AP

Model	Phone Numbers	Directory[6] Names	Entry Codes[1]	Device Codes[2]	Relays	Auxiliary Inputs[3]	Expansion[4]	Computer Programmable[5]	Temporary Codes	Holiday Schedules
1808	600	N/A	1000	0	2	1	No	No	5	No
1808AP[7]	27	N/A	0	100	2	2	6 Max	Yes	10	Yes

1. Entry codes are four (4) digits only and are not the same as device codes. Entry codes grant access when entered on the entry system keypad (or secondary keypad) only.
2. Device codes refer to any five (5) digit RS-485 device used to access an entry point, such as cards, transmitters or PINs (Personal Identification Number). Five (5) digit device codes can also be used on the system keypad.
3. 1808 auxiliary input allows a switch closure to activate relay 2, or can be set to auto-dial a preprogrammed telephone number. 1808 AP uses a standard RS-485 data input.
4. Six (6) additional entry points can be controlled via RS-485 card readers, AVID tag readers, RF receivers or digital keypads.
5. AP Programming software available for free download at doorking.com.
6. Paper directory.
7. Directory can be printed from Access Plus programming software.

Specifications subject to change without notice.

1808 Telephone Entry System

Residential, Commercial

1808 Telephone Entry Systems

1808-082 Surface Mount w/Directory

1808-084 Surface Mount

1808-085 Surface Mount AP (Access Plus)

1808 Lobby Panels

1808-081 Surface Mount

1808-083 Surface Mount w/Directory

Lobby panels can only be used with the 1816 or 1820 telephone intercom system. They cannot be connected directly to telephone service.

Service Connection Options

1800-081 Cellular Voice + Data[1,2]

1800-080 Cellular Voice + Data[1,3]

1815-578 VoIP Adapter[4]

1 - Cellular service plan required. See Section D1.

2 - Use with 1802 AP models.

3 - Use with 1802 and 1802 EPD models.

4 - DKS VoIP subscription required. See Section D1.

Accessories

1506-081 Secondary Keypad surface mount

1506-091 Secondary Keypad flush mount

1804-193 External Speaker

1801-008 Backup Battery 12-Volt .8 Ah

1812-145 CCTV Color Camera

1830-310 TTY Add-on Factory Installed

1830-315 TTY Add-on Kit

1808 AP (ACCESS PLUS ONLY) Expansion Options

2354-010 Conversion Board

1815-235 Conversion Board w/Enclosure

Converts 26-bit Wiegand to RS-485. Requires 12-16 VDC power.

1812-018 12-VDC, 1A Transformer

1200-080 Transformer Box

1816-083 Intercom Phone Expansion .....

The 1816-083 expands the "No Phone Line" telephone intercom interface on Access Plus systems from a single phone line up to 11 phone lines. The system can be further expanded to interface with up to a maximum of 23 phone lines.

RS-485 Card Readers (ACCESS PLUS ONLY)

1815-337 DK ProxPlus Secure .....

1815-332 DK Prox Reader .....

1815-232 ID Tech Reader.....

1815-233 AWID Reader

1815-234 HID Reader

RS-485 Keypads (ACCESS PLUS ONLY)

1513-081 Surface Mount

1513-082 Flush Mount

RS-485 RF Controls (ACCESS PLUS ONLY)

8053-080 MicroPlus Receiver

1810 Telephone Entry System

Residential, Commercial

1810

- Hands free full duplex voice communication
- Programmable Directory Codes (1-4 digits)
- 16-digit dialing
- Includes 16 VAC power transformer

1810 AP (Access Plus) ONLY

- Control up to 8 entry points
- IP Addressable
- PC Programmable
- 2-Digit directory codes
- 20-digit dialing
- Includes 16 VAC power transformer

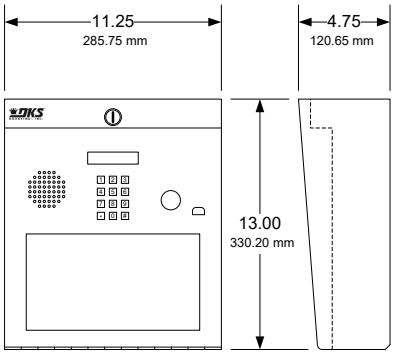

Surface Mount
1810 / 1810 AP

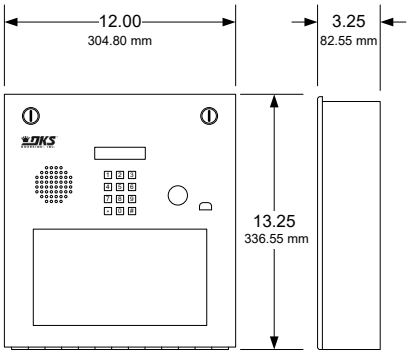

Flush Mount
1810 / 1810 AP

Model	Phone Numbers	Directory[6] Names	Entry Codes[1]	Device Codes[2]	Relays	Auxiliary Inputs[3]	Expansion[4]	Computer Programmable[5]	Temporary Codes	Holiday Schedules
1810	600	N/A	1000	0	2	1	No	No	5	No
1810AP[7]	27	N/A	0	100	2	2	6 Max	Yes	10	Yes

1. Entry codes are four (4) digits only and are not the same as device codes. Entry codes grant access when entered on the entry system keypad (or secondary keypad) only.
2. Device codes refer to any five (5) digit RS-485 device used to access an entry point, such as cards, transmitters or PINs (Personal Identification Number). Five (5) digit device codes can also be used on the system keypad.
3. 1810 auxiliary input allows a switch closure to activate relay 2, or can be set to auto-dial a preprogrammed telephone number. 1810 AP uses a standard RS-485 data input.
4. Six (6) additional entry points can be controlled via RS-485 card readers, AVID tag readers, RF receivers or digital keypads.
5. AP Programming software available for free download at doorking.com.
6. Paper directory.
7. Access Plus model does not have any programming display. Directory can be printed from Access Plus programming software.

Specifications subject to change without notice.

1810 Telephone Entry System

Residential, Commercial

1810 Telephone Entry Systems

1810-080 Surface Mount

1810-084 Flush Mount

1810-095 Surface Mount AP (Access Plus)

1810-096 Flush Mount AP (Access Plus)

1810 Lobby Panels

1810-088 Surface Mount

1810-090 Flush Mount

Lobby panels can only be used with the 1816 or 1820 telephone intercom system. They cannot be connected directly to telephone service.

Service Connection Options

1800-081 Cellular Voice + Data[1,2]

1800-080 Cellular Voice + Data[1,3]

1815-578 VoIP Adapter[4]

1 - Cellular service plan required. See Section D1.

2 - Use with 1802 AP models.

3 - Use with 1802 and 1802 EPD models.

4 - DKS VoIP subscription required. See Section D1.

Accessories

1803-150 Surface Mount Recess Kit

1814-165 Flush Mount Kit Stainless Steel

1814-152 Surface Mount Ring for Flush Units

Accessories

1506-081 Secondary Keypad surface mount

1506-091 Secondary Keypad flush mount

1804-193 External Speaker

1801-008 Backup Battery 12-Volt .8 Ah

2600-584 Heater Kit

1812-145 CCTV Color Camera

1807-012 Handset Kit *(surface mount only)*

1830-310 TTY Add-on Factory Installed

1810 AP (ACCESS PLUS ONLY) Expansion Options

2354-010 Conversion Board

1815-235 Conversion Board w/Enclosure

Converts 26-bit Wiegand to RS-485. Requires 12-16 VDC power.

1812-018 12-VDC, 1A Transformer

1200-080 Transformer Box

1816-083 Intercom Phone Expansion

The 1816-083 expands the "No Phone Line" telephone intercom interface on Access Plus systems from a single phone line up to 11 phone lines. The system can be further expanded to interface with up to a maximum of 23 phone lines.

RS-485 Card Readers (ACCESS PLUS ONLY)

1815-337 DK ProxPlus Secure

1815-332 DK Prox Reader

1815-232 ID Tech Reader

1815-233 AWID Reader

1815-234 HID Reader

RS-485 Keypads (ACCESS PLUS ONLY)

1513-081 Surface Mount

1513-082 Flush Mount

RS-485 RF Controls (ACCESS PLUS ONLY)

8053-080 MicroPlus Receiver

1812 Telephone Entry Systems

Residential

1812 (Classic)

- 2-Digit directory codes
- 11-digit dialing
- Includes 24 VAC transformer
- Call Forward Time Zones
- Do Not Disturb
- Analog Voice Circuit

1812 P and 1812 AP

- 2-Digit directory codes
- 20-digit dialing
- Includes 16 VAC transformer
- Call Forward Time Zones
- Do Not Disturb Feature
- HD Digital Voice Circuit

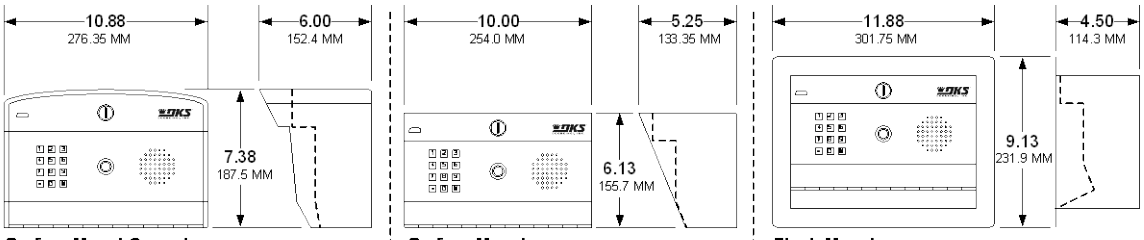

Surface Mount Curved
1812 P / 1812 AP

Surface Mount
1812 / 1812 P / 1812 AP

Flush Mount
1812 / 1812 P / 1812 AP

Model	Phone Numbers	Directory Names	Entry Codes[1,6]	Device Codes[2]	Relays	Auxiliary Inputs[3]	Expansion[4]	Computer Programmable[5]	Temporary Codes	Holiday Schedules
1812	3	N/A	25 /25	0	2	0	No	No	5	No
1812P	27	N/A	0	50	2	0	No	No	10	No
1812AP	27	N/A	0	50	2	2	6	Yes	10	Yes

1. Entry codes are four (4) digits on the 1812. Entry codes grant access when entered on the entry system keypad (or secondary keypad) only.
2. Device codes refer to any five (5) digit RS-485 device used to access an entry point, such as cards, transmitters or PINs (Personal Identification Number). Five (5) digit device codes can also be used as entry codes and are used on the system keypad.
3. 1812 AP uses a standard RS-485 data input.
4. Six (6) additional entry points can be controlled via RS-485 card readers, AVID tag readers, RF receivers or digital keypads.
5. Access Plus Programming software available for free download at doorking.com.
6. Each relay can be programmed with 25 entry codes with specific functions (see the installation manual 1812-065 for detailed information).
   - 14 momentary activation codes
   - 1 flash code
   - 5 hold codes
   - 5 time zone codes

Specifications subject to change without notice.

1812 Telephone Entry Systems

Residential

1812 Classic Systems

1812-081 Surface Mount

1812-097 Surface Mount w/Camera

1812-087 Flush Mount

1812 Plus Systems

1812-095 Surface Mount Curved

1812-089 Surface Mount

1812-098 Surface Mount w/Camera

1812-091 Flush Mount

Service Connection Options

1800-081 Cellular Voice + Data[1,2]

1800-080 Cellular Voice + Data[1,3]

1815-578 VoIP Adapter[4]

1 - Cellular service plan required. See Section D1.

2 - Use with 1802 AP models.

3 - Use with 1802 and 1802 EPD models.

4 - DKS VoIP subscription required. See Section D1.

Accessories

1812-105 Stainless Steel Surface Mount Housing[1]

1506-081 Secondary Keypad surface mount

1506-091 Secondary Keypad flush mount

2600-588 Heater Kit *(for surface mount units)*

2600-582 Heater Kit *(for flush mount units)*

1830-310 TTY Add-on Factory Installed

1830-315 TTY Add-on Kit

1812-145 CCTV Color Camera *(use w/ 088, 093, 094)*

1812-147 CCTV Color Camera

1812-074 Conversion Kit[3]

1 – Replaces the black steel housing.

2 – Secondary keypad not available on Plus models.

3- Upgrades older 1812 units to an 1812 Access Plus unit.

1812 Access Plus Systems

1812-096 Surface Mount Curved

1812-090 Surface Mount

1812-099 Surface Mount w/Camera

1812-092 Flush Mount

1812 Access Plus Expansion Options

2354-010 Conversion Board

1815-235 Conversion Board w/Enclosure

Converts 26-bit Wiegand to RS-485. Requires 12-16 VDC power.

1812-018 12-VDC, 1A Transformer

1200-080 Transformer Box

1816-083 Intercom Phone Expansion

The 1816-083 expands the "No Phone Line" telephone intercom interface on Access Plus systems from a single phone line up to 11 phone lines. The system can be further expanded to interface with up to a maximum of 23 phone lines.

RS-485 Card Readers (ACCESS PLUS ONLY)

1815-337 DK ProxPlus Secure

1815-332 DK Prox Reader

1815-232 ID Tech Reader

1815-233 AWID Reader

1815-234 HID Reader

RS-485 Keypads (ACCESS PLUS ONLY)

1513-081 Surface Mount

1513-082 Flush Mount

RS-485 RF Controls (ACCESS PLUS ONLY)

8053-080 MicroPlus Receiver

1816 Telephone Intercom Systems

Commercial

1816

- Full duplex voice communication
- Interfaces with up to 1200 phone lines
- Tennant C.O. phone service not required
- Programmable directory codes
- Lobby panel / Doorman caller ID
- Built-in call waiting
- Do Not Disturb feature

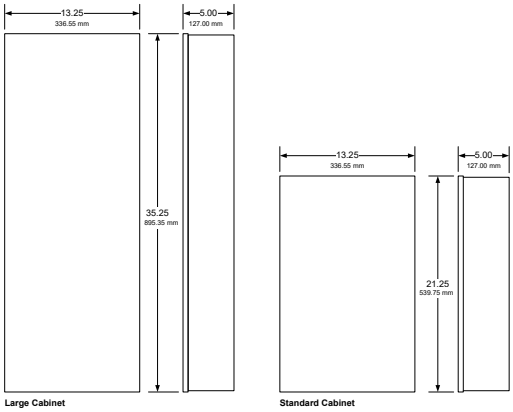

Model	Phone Numbers	Directory Names	Entry Codes[1]	Caller ID	Relays	Doorman Phone	Resident Features[2]	Call Out Numbers	Directory Codes
1816	1200	N/A	1200	Yes	1	Yes	No	10	Programmable

1. Entry codes are four (4) digits. Entry codes grant access when entered on the entry system keypad (or secondary keypad) only.
2. Resident programmable features include: Call Waiting; Do-Not-Disturb; Call Forwarding.

1816 Telephone Intercom Systems

Commercial

1816 Systems

Step 1: Main Control Cabinet

1816-080 Houses 13 Relay Boards (156 lines)

1816-082 Houses 5 Relay Boards (60 lines)

Main control cabinets do not include relay boards.

Step 2: Relay Boards

1982-010

One (1) relay board is required for every 12 phone lines to be interfaced.

Step 3: Decoder Board (if required)

1881-010 Decoder Board

Decoder board(s) are required if the system expands beyond five (5) relay boards. One (1) decoder board is required for every eight (8) relay boards beyond the first five (5) relay boards.

Step 4: Auxiliary Cabinet (if required)

1816-081 Auxiliary Cabinet

Holds up to 16 relay boards and two (2) decoder boards.

Step 5: Phone Blocks and Cables

2370-010 RJ71C Phone Block
One (1) RJ71C is required for each relay board in the system.

1882-042 Connecting Cable
One (1) connecting cable is required for each relay board in the system.

1882-044 Connecting Cable Special Length
Add cost per foot to 1882-042.

Step 6: Lobby Panels

Select lobby panels from the 1802, 1808, 1810 series pages.

1819 Information Telephone System

Commercial

1819

- Full duplex voice communication
- Stores a single phone number
- 10 and 11 digit dialing
- Call button

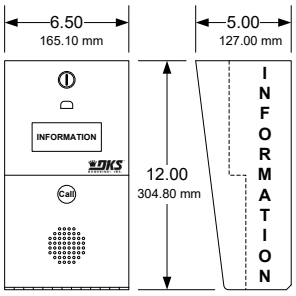

Surface Mount

Model	Phone Numbers	Directory	Entry Codes	Device Codes	Relays	Auxiliary Inputs	Expansion[4]	PC Programmable	Elevator Control	Transaction Buffer
1819	1	N/A	0	0	1	0	0	No	No	No

1. The 1819 is designed as an information phone only. Pressing the CALL button causes the system to dial to a preprogrammed telephone number.

1819 Information Telephone System

Commercial

1819 Telephone Entry System

1819-080 Surface Mount

Service Connection Options

1800-080 Cellular Voice + Data[1]

1815-578 VoIP Adapter[2]

1 - Cellular service plan required. See Section D1.

2 - DKS VoIP subscription required. See Section D1.

Accessories

1801-008 Backup Battery 12-Volt .8 Ah

2600-588 Heater Kit

1802-111 Post Mount Adapter Plate[1]

1 - Required if mounting the unit to a goose neck post.

1833 Telephone Entry / Access Control System

Residential, Commercial

1833

- Full duplex voice communication
- Stores up to 3000 phone numbers
- 255 area codes
- Programmable directory codes
- 10 and 11 digit dialing
- Built-in clock/calendar
- Three (3) built-in relays
- Two (2) 26-bit wiegand inputs
- Expandable to control up to 24 entrances
- 31 security (permission) levels
- 32 holiday schedules
- True anti-pass back features

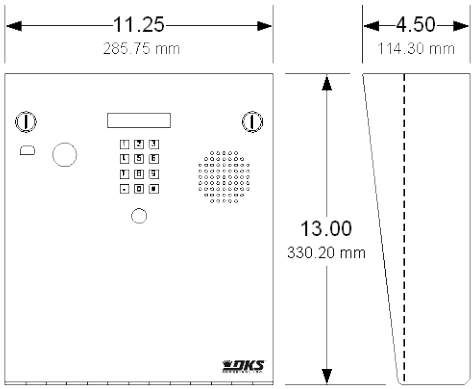

80 Series - Surface Mount

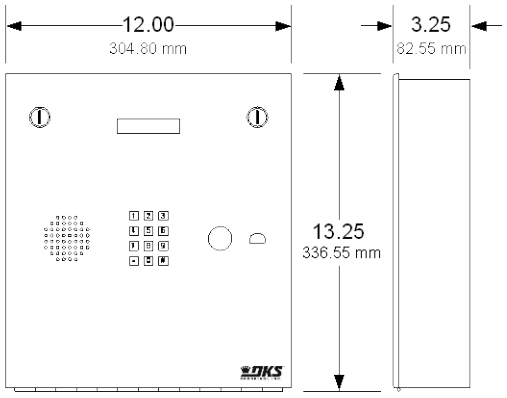

80 Series - Flush Mount

Model	Phone Numbers	Directory	Entry Codes[1]	Device Codes[2]	Relays	Auxiliary Inputs[3]	Expansion[4]	DKS Cloud Programming[5]	Elevator Control	Transaction Buffer
1833	3000	N/A	3000	8000	3	2	48 Max	Yes	Yes	8000

1. Entry codes are four (4) digits only and are not the same as device codes. Entry codes grant access when entered on the entry system keypad (or secondary keypad) only.
2. Device codes refer to any five (5) digit 26-bit wiegand device used to access an entry point, such as cards, transmitters or PINs (Personal Identification Number). Five (5) digit device codes can also be used on the system keypad.
3. 1833 has two 26-bit wiegand inputs.
4. Up to 48 additional entry points can be controlled via card readers, AVID tag readers, RF receivers or digital keypads using wired tracker expansion boards. This is reduced to 24 if using wireless expansion.
5. DKS Cloud is included with connection service subscription plans. Programming with a dedicated PC is available using the Remote Account Manager software - available for free download at doorking.com.

1833 Telephone Entry / Access Control System

Residential, Commercial

1833 Telephone Entry / Access Control System

1833-080 80 Series Surface Mount

1833-084 80 Series Flush Mount

Service Connection Options

1800-080 Cellular Voice + Data[1]

2334-080 VoIP – TCP/IP Control Box[3,5]

1815-578 VoIP Adapter[2,4]

1830-186 Plug & Play[3,4] (Plug & Play)

1830-185 Network Adapter (Manual Setup)

1 – DKS Cellular subscription required. See Section D1.

2 – DKS VoIP subscription required. See Section D1.

3 – DKS VoIP or Data over IP subscription required. See Section D1.

4 – 1815-578 is required for voice, 1830-186 or 1830-185 is required for data

5 – Combines the 1815-578 and 1830-186 into a common housing with built-in ethernet switch.

80 Series Mounting Accessories

1803-150 Surface Mount Recess Kit

1814-165 Flush Mount Kit Stainless Steel

1814-152 Surface Mount Ring for Flush Units

Accessories

1506-081 Secondary Keypad surface mount

1506-091 Secondary Keypad flush mount

1804-193 External Speaker

1801-008 Backup Battery 12-Volt .8 Ah

2600-584 Heater Kit

1812-145 CCTV Color Camera

1812-147 Camera *(use with surface mount only)*

1807-012 Handset Kit *(surface mount only)*

1830-310 TTY Add-on Factory Installed

1830-315 TTY Add-on Kit

Expansion Options

2358-010 Tracker Expansion Board

2351-080 Sgl Box[1] *(1 board max)*

2351-085 Sgl Box[1] + 1470-080 900 MHz RF Module

2351-082 QUAD Box[1] Pre-wired *(4 boards max)*

1 – Includes one (1) 2358-010 board and 16V, 40 VA transformer.

Expansion Option Wireless Kits

2333-080 Base Board Kit[1] 900 MHz

1470-080 Expansion Board Kit[2] 900 MHZ

2332-080 Dual channel repeater 900 MHz

1 - One (1) baseboard kit is installed in the 1833 controller.

2 – Expansion board kit(s) are installed on each 2358 tracker board.

1514-079 900 MHz antenna extension kit

8064-046 Coax cable extension 13-ft (3.9m)

1514-028 Disk antenna 900 MHz

1514-019 Six-inch (152mm) antenna 900 MHz

1514-140 Wireless range test kit 900 MHz

Elevator Control

2348-040[1] Elevator control board + hardware

2348-080[2] Lockable enclosure

2348-081[3] Lockable enclosure large

1 – Includes board and mounting hardware.

2 – Includes one (1) 2348-010 board. Room for two (2) boards' total.

3 – Includes one (1) 2340-010 board. Room for four (4) boards' total.

1834 Telephone Entry / Access Control System

Residential, Commercial

1834 80 Series

- Separate surface and flush mount designs
- Surface mount includes black hood
- Optional surface mount trim ring
- Optional stainless steel flush mount kit
- Optional stainless steel wall mount trim ring for flush units

1834 90 Series

- Larger cabinet
- One design for surface, flush or wall mounting
- Dual locks, double weather seal
- Space for card reader[1], IP camera, TCP-IP adapter
- Optional 12 ga. hood, stainless steel or black
- Optional stainless steel flush mount kit

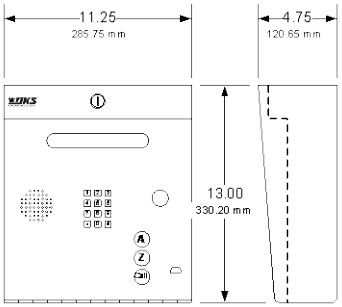

80 Series - Surface Mount

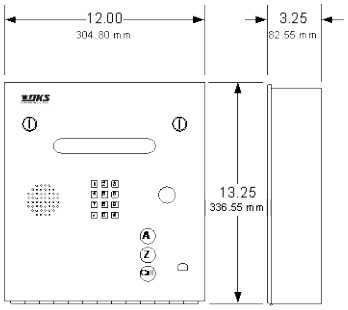

80 Series - Flush Mount

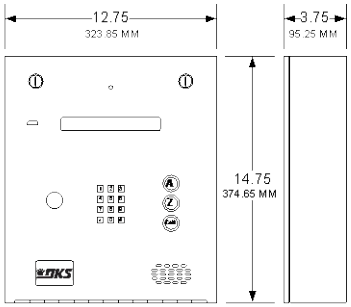

90 Series – Surface, Flush or Wall Mount

Model[1]	Phone Numbers	Directory	Entry Codes[2]	Device Codes[3]	Relays	Auxiliary Inputs[4]	Expansion	DKS Cloud Programming[5]	Elevator Control	Transaction Buffer
1834	3000	1-Line Electronic	3000	0	2	0	No	Yes	No	8000

1. 90 Series internal card reader mounting will accommodate the following card readers only: 1815-302 (DK Prox), 1815-380 (HID), 1815-215 (ID-Teck). Note that the 1834 does not have inputs for the card reader. Any card reader installed in the 1834 will have to be connected to another access controller. See 1835 if a built-in card reader is desired.
2. Entry codes are four (4) digits only and are not the same as device codes. Entry codes grant access when entered on the entry system keypad (or secondary keypad) only.
3. Device codes refer to any five (5) digit 26-bit wiegand device used to access an entry point, such as cards, transmitters or PINs (Personal Identification Number). Five (5) digit device codes can also be used on the system keypad.
4. 1834 does not have any 26-bit wiegand inputs.
5. DKS Cloud is included with connection service subscription plans. Programming with a dedicated PC is available using the Remote Account Manager software - available for free download at doorking.com.

1834 Telephone Entry / Access Control System

Residential, Commercial

1834 Telephone Entry / Access Control System

1834-080 80 Series Surface Mount

1834-084 80 Series Flush Mount

1834-090 90 Series Surface, Flush or Wall Mount

Service Connection Options

1800-080 Cellular Voice + Data[1]

2334-080 VoIP – TCP/IP Control Box[3,5]

1815-578 VoIP Adapter[2,4]

1830-186 Plug & Play[3,4] (Plug & Play)

1830-185 Network Adapter (Manual Setup)

1 – DKS Cellular subscription required. See Section D1.

2 – DKS VoIP subscription required. See Section D1.

3 – DKS VoIP or Data over IP subscription required. See Section D1.

4 – 1815-578 is required for voice, 1830-186 or 1830-185 is required for data

5 – Combines the 1815-578 and 1830-186 into a common housing with built-in ethernet switch.

80 Series Mounting Accessories

1803-150 Surface Mount Recess Kit

1814-165 Flush Mount Kit Stainless Steel

1814-152 Surface Mount Ring for Flush Units

90 Series Mounting Accessories

1814-180 Stainless Steel Hood (12 ga)[1]

1814-185 Black Hood (12 ga)

1814-200 Flush Kit (Rough-in box + trim ring)

1 – Recommended for corrosive environments such as coastal areas.

Accessories

1506-081 Secondary Keypad surface mount

1506-091 Secondary Keypad flush mount

1804-193 External Speaker

1801-008 Backup Battery 12-Volt .8 Ah

2600-584 Heater Kit

1812-145 CCTV Color Camera

1807-012 Handset Kit *(surface mount only)*

1830-310 TTY Add-on Factory Installed

1830-315 TTY Add-on Kit

1835 Telephone Entry / Access Control System

Residential, Commercial

1835 80 Series

- Separate surface and flush mount designs
- Surface mount includes black hood
- Optional surface mount trim ring
- Optional stainless steel flush mount kit
- Optional stainless steel wall mount trim ring for flush units

1835 90 Series

- Larger cabinet
- One design for surface, flush or wall mounting
- Dual locks, double weather seal
- Space for card reader, IP camera, TCP-IP adapter
- Optional 12 ga. hood, stainless steel or black
- Optional stainless steel flush mount kit

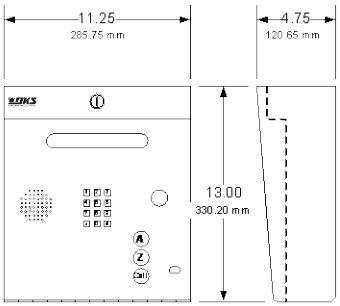

80 Series - Surface Mount

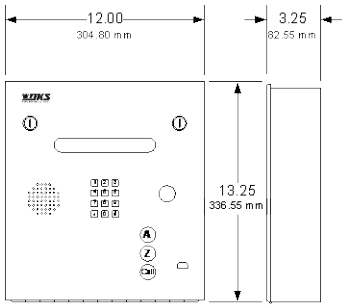

80 Series - Flush Mount

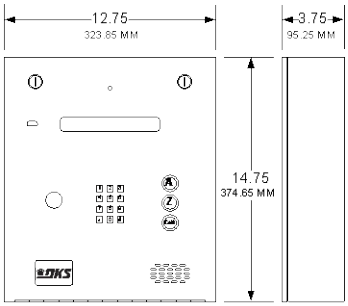

90 Series – Surface, Flush or Wall Mount

Model[1]	Phone Numbers	Directory	Entry Codes[2]	Device Codes[3]	Relays	Auxiliary Inputs[4]	Expansion[5]	DKS Cloud Programming[6]	Elevator Control	Transaction Buffer
1835	3000	1-Line Electronic	3000	8000	3	2	48 Max	Yes	Yes	8000

1. 90 Series internal card reader mounting will accommodate the following card readers only: 1815-302 (DK Prox), 1815-380 (HID), 1815-215 (ID-Teck).
2. Entry codes are four (4) digits only and are not the same as device codes. Entry codes grant access when entered on the entry system keypad (or secondary keypad) only.
3. Device codes refer to any five (5) digit 26-bit wiegand device used to access an entry point, such as cards, transmitters or PINs (Personal Identification Number). Five (5) digit device codes can also be used on the system keypad.
4. 1835 has two 26-bit wiegand inputs.
5. Up to 48 additional entry points can be controlled via card readers, AVID tag readers, RF receivers or digital keypads using wired tracker expansion boards. This is reduced to 24 if using wireless expansion.
6. DKS Cloud is included with connection service subscription plans. Programming with a dedicated PC is available using the Remote Account Manager software - available for free download at doorking.com.

1835 Telephone Entry / Access Control System

Residential, Commercial

1835 Telephone Entry / Access Control System

1835-080 80 Series Surface Mount

1835-084 80 Series Flush Mount

1835-090 90 Series Surface, Flush or Wall Mount

Service Connection Options

1800-080 Cellular Voice + Data[1]

2334-080 VoIP – TCP/IP Control Box[3,5]

1815-578 VoIP Adapter[2,4]

1830-186 Plug & Play[3,4] (Plug & Play)

1830-185 Network Adapter (Manual Setup)

1 – DKS Cellular subscription required. See Section D1.

2 – DKS VoIP subscription required. See Section D1.

3 – DKS VoIP or Data over IP subscription required. See Section D1.

4 – 1815-578 is required for voice, 1830-186 or 1830-185 is required for data

5 – Combines the 1815-578 and 1830-186 into a common housing with built-in ethernet switch.

80 Series Mounting Accessories

1803-150 Surface Mount Recess Kit

1814-165 Flush Mount Kit Stainless Steel

1814-152 Surface Mount Ring for Flush Units

90 Series Mounting Accessories

1814-180 Stainless Steel Hood (12 ga)[1]

1814-185 Black Hood (12 ga)

1814-200 Flush Kit (Rough-in box + trim ring)

1 – Recommended for corrosive environments such as coastal areas.

Accessories

1506-081 Secondary Keypad surface mount

1506-091 Secondary Keypad flush mount

1804-193 External Speaker

1801-008 Backup Battery 12-Volt .8 Ah

2600-584 Heater Kit

1812-145 CCTV Color Camera

1807-012 Handset Kit *(surface mount only)*

1830-310 TTY Add-on Factory Installed

1830-315 TTY Add-on Kit

Expansion Options

2358-010 Tracker Expansion Board

2351-080 Sgl Box[1] *(1 board max)*

2351-085 Sgl Box[1] + 1470-080 900 MHz RF Module

2351-082 QUAD Box[1] Pre-wired *(4 boards max)*

1 – Includes one (1) 2358-010 board and 16V, 40 VA transformer.

Expansion Option Wireless Kits

2333-080 Base Board Kit[1] 900 MHz

1470-080 Expansion Board Kit[2] 900 MHZ

2332-080 Dual channel repeater 900 MHz

1 - One (1) baseboard kit is installed in the 1833 controller.

2 – Expansion board kit(s) are installed on each 2358 tracker board.

1514-079 900 MHz antenna extension kit

8064-046 Coax cable extension 13-ft (3.9m)

1514-028 Disk antenna 900 MHz

1514-019 Six-inch (152mm) antenna 900 MHz

1514-140 Wireless range test kit 900 MHz

Elevator Control

2348-040[1] Elevator control board + hardware

2348-080[2] Lockable enclosure

2348-081[3] Lockable enclosure large

1 – Includes board and mounting hardware.

2 – Includes one (1) 2348-010 board. Room for two (2) boards' total.

3 – Includes one (1) 2340-010 board. Room for four (4) boards' total.

1837 Telephone Entry / Access Control System

Residential, Commercial

1837 80 Series

- Separate surface and flush mount designs
- Surface mount includes black hood
- Optional surface mount trim ring
- Optional stainless steel flush mount kit
- Optional stainless steel wall mount trim ring for flush units

1837 90 Series

- Larger cabinet
- One design for surface, flush or wall mounting
- Dual locks, double weather seal
- Space for card reader, IP camera, TCP-IP adapter
- Optional 12 ga. hood, stainless steel or black
- Optional stainless steel flush mount kit

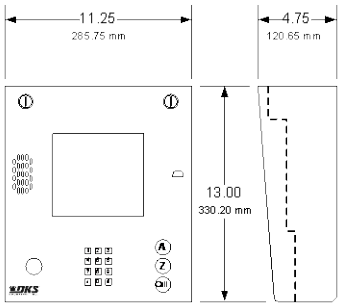

80 Series - Surface Mount

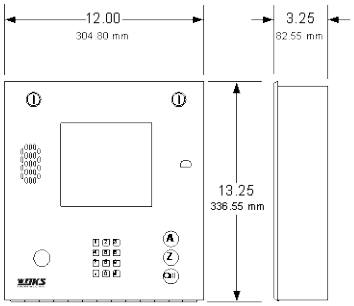

80 Series - Flush Mount

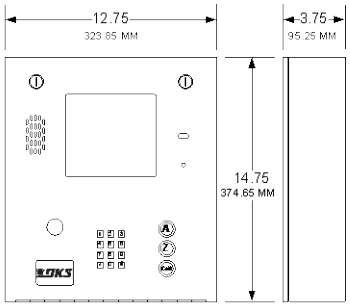

90 Series – Surface, Flush or Wall Mount

Model[1]	Phone Numbers	Directory	Entry Codes[2]	Device Codes[3]	Relays	Auxiliary Inputs[4]	Expansion[5]	DKS Cloud Programming[6]	Elevator Control	Transaction Buffer
1837	3000	8-Line Electronic	3000	8000	3	2	48 Max	Yes	Yes	8000

1. 90 Series internal card reader mounting will accommodate the following card readers only: 1815-302 (DK Prox), 1815-380 (HID), 1815-215 (ID-Teck).
2. Entry codes are four (4) digits only and are not the same as device codes. Entry codes grant access when entered on the entry system keypad (or secondary keypad) only.
3. Device codes refer to any five (5) digit 26-bit wiegand device used to access an entry point, such as cards, transmitters or PINs (Personal Identification Number). Five (5) digit device codes can also be used on the system keypad.
4. 1837 has two 26-bit wiegand inputs.
5. Up to 48 additional entry points can be controlled via card readers, AVID tag readers, RF receivers or digital keypads using wired tracker expansion boards. This is reduced to 24 if using wireless expansion.
6. DKS Cloud is included with connection service subscription plans. Programming with a dedicated PC is available using the Remote Account Manager software - available for free download at doorking.com.

1837 Telephone Entry / Access Control System

Residential, Commercial

1837 Telephone Entry / Access Control System

1837-080 80 Series Surface Mount

1837-084 80 Series Flush Mount

1837-090 90 Series Surface, Flush or Wall Mount

Service Connection Options

1800-080 Cellular Voice + Data[1]

2334-080 VoIP – TCP/IP Control Box[3,5]

1815-578 VoIP Adapter[2,4]

1830-186 Plug & Play[3,4] (Plug & Play)

1830-185 Network Adapter (Manual Setup)

1 – DKS Cellular subscription required. See Section D1.

2 – DKS VoIP subscription required. See Section D1.

3 – DKS VoIP or Data over IP subscription required. See Section D1.

4 – 1815-578 is required for voice, 1830-186 or 1830-185 is required for data

5 – Combines the 1815-578 and 1830-186 into a common housing with built-in ethernet switch.

80 Series Mounting Accessories

1803-150 Surface Mount Recess Kit

1814-165 Flush Mount Kit Stainless Steel

1814-152 Surface Mount Ring for Flush Units

90 Series Mounting Accessories

1814-180 Stainless Steel Hood (12 ga)[1]

1814-185 Black Hood (12 ga)

1814-200 Flush Kit (Rough-in box + trim ring)

1 – Recommended for corrosive environments such as coastal areas.

Accessories

1506-081 Secondary Keypad surface mount

1506-091 Secondary Keypad flush mount

1804-193 External Speaker

1801-008 Backup Battery 12-Volt .8 Ah

2600-584 Heater Kit

1812-145 CCTV Color Camera

1807-012 Handset Kit *(surface mount only)*

1830-310 TTY Add-on Factory Installed

1830-315 TTY Add-on Kit

Expansion Options

2358-010 Tracker Expansion Board

2351-080 Sgl Box[1] *(1 board max)*

2351-085 Sgl Box[1] + 1470-080 900 MHz RF Module

2351-082 QUAD Box[1] Pre-wired *(4 boards max)*

1 – Includes one (1) 2358-010 board and 16V, 40 VA transformer.

Expansion Option Wireless Kits

2333-080 Base Board Kit[1] 900 MHz

1470-080 Expansion Board Kit[2] 900 MHZ

2332-080 Dual channel repeater 900 MHz

1 - One (1) baseboard kit is installed in the 1833 controller.

2 – Expansion board kit(s) are installed on each 2358 tracker board.

1514-079 900 MHz antenna extension kit

8064-046 Coax cable extension 13-ft (3.9m)

1514-028 Disk antenna 900 MHz

1514-019 Six-inch (152mm) antenna 900 MHz

1514-140 Wireless range test kit 900 MHz

Elevator Control

2348-040[1] Elevator control board + hardware

2348-080[2] Lockable enclosure

2348-081[3] Lockable enclosure large

1 – Includes board and mounting hardware.

2 – Includes one (1) 2348-010 board. Room for two (2) boards' total.

3 – Includes one (1) 2340-010 board. Room for four (4) boards' total.

1838 Access Controller

Commercial

1838

- Stores up to 3000 usernames
- Programmable directory codes
- Built-in clock/calendar
- Voice communication capability
- Optional plug-in programming display
- Two (2) built-in relays control relays
- Two (2) 26-bit wiegand inputs
- Expandable to control up to 48 entrances (wired)
- 31 security (permission) levels
- 32 holiday schedules
- True anti-pass back features

Access Controller

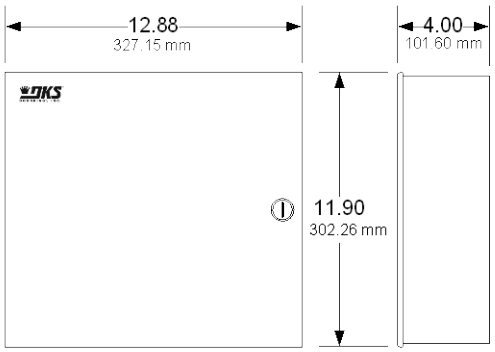

1838-081

Call Stations

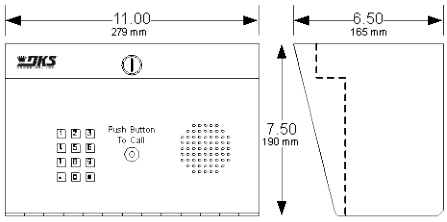

1838-120

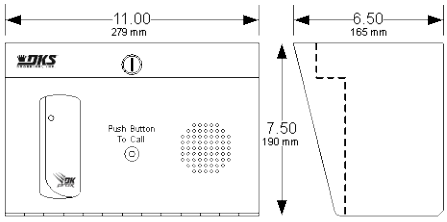

1838-121, 1838-122, 1838-123, 1838-124, 1838-134

Model	User Names	Directory	Entry Codes[1]	Device Codes[2]	Relays	Auxiliary Inputs[3]	Expansion[4]	DKS Cloud Programming[5]	Elevator Control	Transaction Buffer
1838	3000	N / A	3000	8000	2	2	48 Max	Yes	Yes	8000

1. Entry codes are four (4) digits only and are not the same as device codes. Entry codes grant access when entered on the entry system keypad (or secondary keypad) only.
2. Device codes refer to any five (5) digit 26-bit wiegand device used to access an entry point, such as cards, transmitters or PINs (Personal Identification Number). Five (5) digit device codes can also be used on the system keypad.
3. 1838 has two 26-bit wiegand inputs.
4. Up to 48 additional entry points can be controlled via card readers, AVID tag readers, RF receivers or digital keypads using wired tracker expansion boards. This is reduced to 24 if using wireless expansion.
5. DKS Cloud is included with connection service subscription plans. Programming with a dedicated PC is available using the Remote Account Manager software - available for free download at doorking.com.

1838 Access Controller

Commercial

1838 Access Controller

1838-081 Surface Mount

Service Connection Options

1800-080 Cellular Voice + Data[1]

2334-080 VoIP – TCP/IP Control Box[3,5]

1815-578 VoIP Adapter[2,4]

1830-186 Plug & Play[3,4] (Plug & Play)

1830-185 Network Adapter (Manual Setup)

1 – DKS Cellular subscription required. See Section D1.

2 – DKS VoIP subscription required. See Section D1.

3 – DKS VoIP or Data over IP subscription required. See Section D1.

4 – 1815-578 is required for voice, 1830-186 or 1830-185 is required for data

5 – Combines the 1815-578 and 1830-186 into a common housing with built-in ethernet switch.

Call Stations[1, 2]

1838-120 Call station w/keypad

1838-121 Call Station w/ID Tech card reader

1838-122 Call station w/AWID card reader

1838-123 Call station w/HID card reader

1838-124 Call station w/DK Prox card reader

1838-134 Call Station w/DK ProxPlus card reader

1494-010 Microphone combiner[3]

1 – Provides voice communication via telephone communication.

2 – Requires active telephone line.

3 – Use if two call stations will share the same telephone line.

Accessories

1838-220 1 x 20 LCD Programming Display

1506-081 Secondary Keypad surface mount

1506-091 Secondary Keypad flush mount

1801-008 Backup Battery 12-Volt .8 Ah

Expansion Options

2358-010 Tracker Expansion Board

2351-080 Sgl Box[1] *(1 board max)*

2351-085 Sgl Box[1] + 1470-080 900 MHz RF Module

2351-082 QUAD Box[1] Pre-wired *(4 boards max)*

1 – Includes one (1) 2358-010 board and 16V, 40 VA transformer.

Expansion Option Wireless Kits

2333-080 Base Board Kit[1] 900 MHz

1470-080 Expansion Board Kit[2] 900 MHZ

2332-080 Dual channel repeater 900 MHz

1 - One (1) baseboard kit is installed in the 1833 controller.

2 – Expansion board kit(s) are installed on each 2358 tracker board.

1514-079 900 MHz antenna extension kit

8064-046 Coax cable extension 13-ft (3.9m)

1514-028 Disk antenna 900 MHz

1514-019 Six-inch (152mm) antenna 900 MHz

1514-140 Wireless range test kit 900 MHz

Elevator Control

2348-040[1] Elevator control board + hardware

2348-080[2] Lockable enclosure

2348-081[3] Lockable enclosure large

1 – Includes board and mounting hardware.

2 – Includes one (1) 2348-010 board. Room for two (2) boards' total.

3 – Includes one (1) 2340-010 board. Room for four (4) boards' total.

1838 Access Plus Controller

Residential, Commercial

1838 AP

- Stores up to 100 user names
- Programmable directory codes
- Built-in clock/calendar
- Voice communication capability
- Optional plug-in programming display
- Control up to 8 entry points
- IP Addressable
- PC Programmable
- 2-Digit directory codes
- 20-digit dialing
- Includes 16 VAC power transformer

AccessPlus Controller

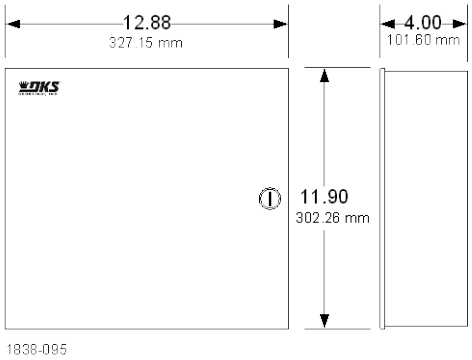

Model	Phone Numbers	Directory Names	Entry Codes[1]	Device Codes[2]	Relays	Auxiliary Inputs[3]	Expansion[4]	PC Programmable[5]	Temporary Codes	Holiday Schedules
1838 AP	27	N/A	50	100	2	2	6 Max	Yes	10	Yes

1. Entry codes are four (4) digits only and are not the same as device codes. Entry codes grant access when entered on the entry system keypad (or secondary keypad) only.
2. Device codes refer to any five (5) digit RS-485 device used to access an entry point, such as cards, transmitters or PINs (Personal Identification Number). Five (5) digit device codes can also be used on the system keypad.
3. 1838 AP uses a standard RS-485 data input.
4. Six (6) additional entry points can be controlled via RS-485 card readers, AVID tag readers, RF receivers or digital keypads.
5. AP Programming software available for free download at doorking.com.

1838 Access Plus Controller

Residential, Commercial

1838 Access Plus Controller

1838-095 Surface Mount

Service Connection Options

1800-081 Cellular Voice + Data[1]

2334-081 VoIP – TCP/IP Control Box[2]

1815-578 VoIP Adapter[2]

1 – DKS Cellular subscription required. See Section D1.

2 – DKS VoIP or Data subscription required. See Section D1.

1838 Access Plus Expansion Options

2354-010 Conversion Board

1815-235 Conversion Board w/Enclosure

Converts 26-bit Wiegand to RS-485. Requires 12-16 VDC power.

1812-018 12-VDC, 1A Transformer

1200-080 Transformer Box

1816-083 Intercom Phone Expansion

The 1816-083 expands the "No Phone Line" telephone intercom interface on Access Plus systems from a single phone line up to 11 phone lines. The system can be further expanded to interface with up to a maximum of 23 phone lines.

RS-485 Card Readers (ACCESS PLUS ONLY)

1815-337 DK ProxPlus Secure

1815-332 DK Prox Reader

1815-232 ID Tech Reader

1815-233 AWID Reader

1815-234 HID Reader

RS-485 Keypads (ACCESS PLUS ONLY)

1513-081 Surface Mount

1513-082 Flush Mount

RS-485 RF Controls (ACCESS PLUS ONLY)

8053-080 MicroPlus Receiver

2108 Series Video Entry Systems

Residential

2108

- Control up to three entry points
- Broadcast calling up to four phone numbers
- Internet or cellular connection
- Program from a laptop, tablet or smartphone
- All programming saved in the DKS Cloud

App

- DKS 2112 Resident app
- App available on App Store and Google Play
- Initiate video stream at any time from the app
- Activate door or gate from the app
- Check door/ gate status

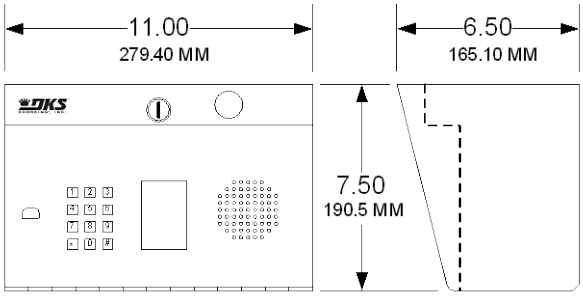

2108 Surface Mount

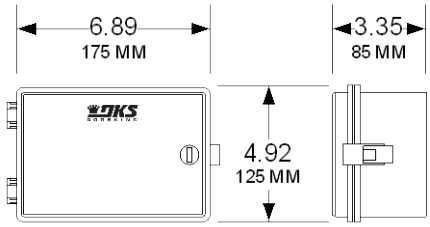

Cellular Kit External

Model[1]	Phone Numbers[2]	Directory Codes[3]	Entry Codes[4]	Relays	Auxiliary Inputs	IP Camera	Cloud Programming[5]	Do Not Call Schedule	Hold Open Schedules
2108	40	10	500	3	0	Yes	Yes	Yes	Yes

1. The 2108 must have an internet connection (wired or cellular) to operate. If using cellular, an external cellular kit is required (2112-152 or 2112-153). Standard residential package subscription is required (see Section C1, pages 10-11 for subscription rates). 2108 has a built-in paper directory for up to 10 residents.
2. Up to four (4) phone numbers per directory code.
3. 10 directory codes are available, meaning the 2100 series can be used for up to 10 residents. Directory codes can be set for one (1) to five (5) digits in length.
4. Entry codes can be set to four (4) digits or five (5) digits in length.
5. Program from a laptop, tablet, or smartphone.

2108 Series Video Entry System

Residential

2108 Video Entry System[1]

2108-090 Surface Mount [2]

1 – Requires an internet connection via ethernet or cellular.

2 - If using cellular for the internet connection, external cellular kit is required.

Subscription Fees

Standard Residential Package monthly subscription fee is required for 2100 series systems to operate. See Section D1.

Subscription fee includes:

- VoIP for Voice Calling
- Video Calling (requires the DKS 2112 Resident app on your smartphone)
- DKS Cloud database for programming and system management

The commands listed below require permission from the system administrator and may not be available to all residents.

- On command video monitoring (from your smartphone)
- Relay (door/gate) status (open – closed – held open)
- On command relay control (open – close – hold open)
- Scheduled relay control
- Entry code functions

Cellular Kits External

2112-152 Cellular Kit External T-Mobile[1]

2112-153 Cellular Kit External AT&T[1,2]

1 – Cellular add-on subscription required. See Section D1.

2 – AT&T cellular service requires Minimum Build 32 (check your online account event log – type "build" in the search bar).

Upgrade Kits[4]

2112-581 Upgrade Kit[1,2]

2112-582 Upgrade Kit[3]

1 – Convert 1812 -081, 1812-089, 1812-090, 1812-092, 1812-097, 1812-098, 1812-099 to 2112.

2 – If using cellular, external cellular kit will be required.

3 – Convert 1812- 095, 1812-096 to 2112.

4 – The 2112 system does not have any expansion capabilities. Be aware of this if converting an 1812 Access Plus system to a 2112 system.

Transformer / Power Supply

1804-060 Transformer 16 VAC, 20 VA[1]

1200-080 Transformer Box

1 – Transformer is included with the 2108.

2112 Video Entry System

Residential

2112

- Control up to three entry points
- Broadcast calling up to four phone numbers
- Internet or cellular connection
- Program from a laptop, tablet or smartphone
- All programming saved in the DKS Cloud

App

- DKS 2112 Resident app
- App available on App Store and Google Play
- Initiate video stream at any time from the app
- Activate door or gate from the app
- Check door/ gate status

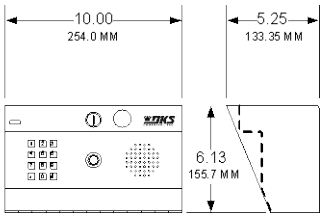

2112 Surface Mount

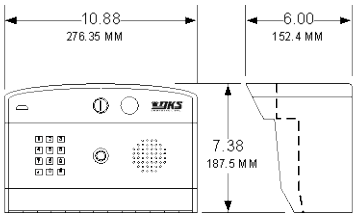

2112 Surface Mount Curved

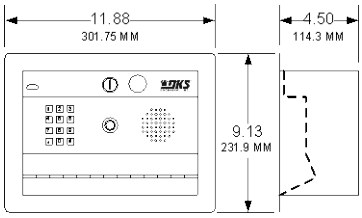

2112 Flush Mount

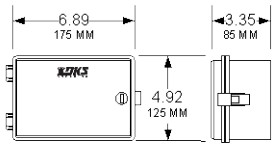

Cellular Kit External - use with Surface and Flush Mount units

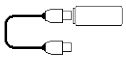

Cellular Kit Internal- use with Surface Mount Curved Only

Model[1]	Phone Numbers[2]	Directory Codes[3]	Entry Codes[4]	Relays	Auxiliary Inputs	IP Camera	Cloud Programming[5]	Do Not Call Schedule	Hold Open Schedules
2112	40	10	500	3	0	Yes	Yes	Yes	Yes

1. The 2112 must have an internet connection (wired or cellular) to operate. If using cellular for the surface or flush mount, an external cellular kit is required (2112-152 or 2112-153). Standard residential package subscription is required (see Section C1, pages 10-11 for subscription rates).
2. Up to four (4) phone numbers per directory code.
3. 10 directory codes are available, meaning the 2100 series can be used for up to 10 residents. Directory codes can be set for one (1) to five (5) digits in length.
4. Entry codes can be set to four (4) digits or five (5) digits in length.
5. Program from a laptop, tablet, or smartphone.

2112 Series Video Entry System

Residential

2112 Video Entry System[1]

2112-081 Surface Mount[2]

2112-082 Surface Mount Curved

2112-083 Flush Mount[2]

1 – Requires an internet connection via ethernet or cellular.

2 – If using cellular, an external cellular kit is required.

Subscription Fees

Standard Residential Package monthly subscription fee is required for 2100 series systems to operate. See Section D1.

Subscription fee includes:

- VoIP for Voice Calling
- Video Calling (requires the DKS 2112 Resident app on your smartphone)
- DKS Cloud database for programming and system management

The commands listed below require permission from the system administrator and may not be available to all residents.

- On command video monitoring (from your smartphone)
- Relay (door/gate) status (open – closed – held open)
- On command relay control (open – close – hold open)
- Scheduled relay control
- Entry code functions

Cellular Kits Internal

2112-150 Cellular Kit Internal T-Mobile[1,2]

2112-151 Cellular Kit Internal AT&T[1,2,3]

1 – Cellular add-on subscription required. See Section D1.

2 – Use with surface mount curved only.

3 – AT&T cellular service requires Minimum Build 32 (check your online account event log – type "build" in the search bar).

Cellular Kits External

2112-152 Cellular Kit External T-Mobile[1]

2112-153 Cellular Kit External AT&T[1,2]

1 – Cellular add-on subscription required. See Section D1.

2 – AT&T cellular service requires Minimum Build 32 (check your online account event log – type "build" in the search bar).

Upgrade Kits[4]

2112-581 Upgrade Kit[1,2]

2112-582 Upgrade Kit[3]

1 – Convert 1812 -081, 1812-089, 1812-090, 1812-092, 1812-097, 1812-098, 1812-099 to 2112.

2 – If using cellular, external cellular kit will be required.

3 – Convert 1812- 095, 1812-096 to 2112.

4 – The 2112 system does not have any expansion capabilities. Be aware of this if converting an 1812 Access Plus system to a 2112 system.

Transformer / Power Supply

1804-060 Transformer 16 VAC, 20 VA[1]

1200-080 Transformer Box

1 – Transformer is included with the 2108.

2132 Video Entry / Access Control System

Commercial

2132

- Three entry points, expandable to 48
- POE ++ (Type 3) or 12-24 VDC
- Internet or cellular connection
- Program from a laptop, tablet or smartphone
- Geo Fencing*

App

- DKS Community app
- App available on App Store and Google Play
- Initiate video stream at any time from the app
- Activate door or gate from the app
- Check door/ gate status

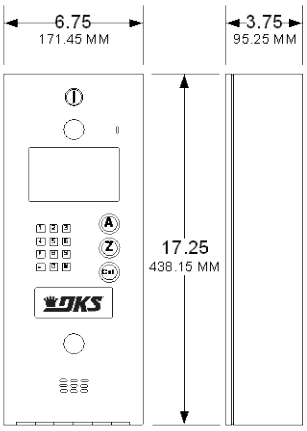

2132-090
Surface, Flush or Wall Mount

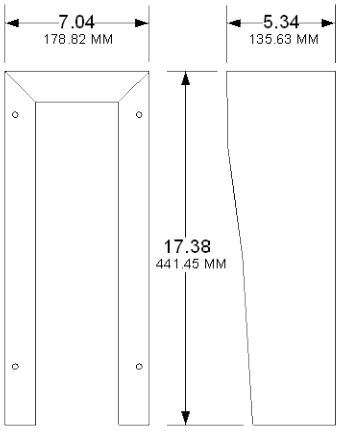

2132-207 / 2132-208
Stainless Steel / Black Hood

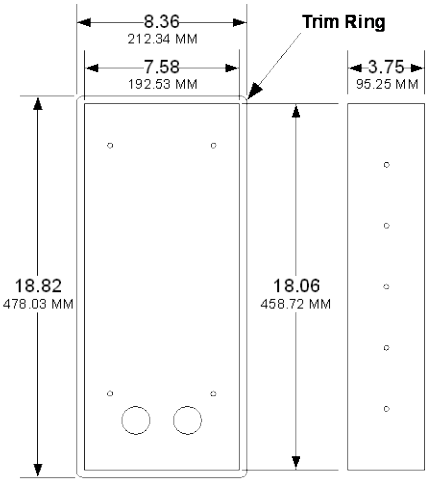

2132-205
Trim Ring

2132-206
Flush Mount Rough -In Box

Model[1]	Users	Device Codes[2]	Entry Codes[3]	Internal Relays	Wiegand Inputs[4]	IP Camera	Cloud Programming[5]	Visitor Management[6]	Elevator Control[7]
2132	10,000	25 / each Dir Code	10,000	3	2	Yes	Yes	Yes	Yes

1. The 2132 must have an internet connection (wired or cellular) to operate. DKS Cloud subscription is required. If using a cellular connection with a system that is Flush mounted, an external cellular antenna will be required.
2. Up to 25 device codes can be added for each directory code.
3. Entry codes can be set to four (4) digits or five (5) digits in length.
4. Two 26-bit Wiegand inputs, expandable to 48 wired devices or 24 wireless devices. Expansion requires Tracker expansion boards (2358-010).
5. Program from a laptop, tablet, or smartphone.
6. Scheduled or one-time. Guest keypad codes.
7. Up to eight (8) elevators; 64 floors each elevator.

*Geo Fencing

When enabled, the Geo Fencing feature allows managers to limit door/gate operation from the app from 0.1 up to 99.9 miles. If the user is further away from the door/gate than the distance set, they will not be able to activate (open) it.

2132 Video Entry / Access Control System

Commercial

2132 Video Entry / Access Control System[1]

2132-090

1 – Requires an internet connection via ethernet or cellular.

Subscription Fees

Standard Residential Package monthly subscription fee is required for 2100 series systems to operate. See Section D1.

Subscription fee includes:

- VoIP for Voice Calling
- Video Calling (requires the DKS Community app on your smartphone)
- DKS Cloud database for programming and system management

The commands listed below require permission from the system administrator and may not be available to all residents.

- On command video monitoring (from your smartphone)
- Relay (door/gate) status (open – closed – held open)
- On command relay control (open – close – hold open)
- Scheduled relay control
- Entry code functions

2132 Cellular Kit Options[1]

2137-103 AT&T

2137-105 Verizon

1 – Additional monthly cellular fees apply.

2132 Accessories

2132-205 Flush Mount SS Trim Ring

2132-206 Flush Mount Rough-In Box

2132-207 Surface Mount SS Hood (12 ga)[1]

2132-208 Surface Mount Black Hood (12 ga)

2132-111 Post Mount Adapter Kit

2132-100 Fan Kit[2]

2137-102 Battery Backup Kit

1 – Recommended for corrosive environments such as coastal areas.

2 – Recommended in hot environments.

Expansion Options

2358-010 Tracker Expansion Board

2351-080 Sgl Box[1] *(1 board max)*

2351-085 Sgl Box[1] + 1470-080 RF Module

2351-082 QUAD Box[1] Pre-wired *(4 boards max)*

1 – Includes one (1) 2358-010 board and 16V, 40 VA transformer.

Expansion Option Wireless Kits

2137-101 Wireless Wiegand Baseboard 900 MHz

This baseboard is installed on the 2100 series entry system control board and provides a wireless connection to 2358 tracker expansion boards.

1514-079 900 MHz antenna extension kit

1514-140 Wireless range test kit 900 MHz

Elevator Control

2348-040[1] Elevator control board + hardware

2348-080[2] Lockable enclosure

2348-081[3] Lockable enclosure large

1 – Includes board and mounting hardware.

2 – Includes one (1) 2348-010 board. Room for two (2) boards' total.

3 – Includes one (1) 2340-010 board. Room for four (4) boards' total.

2137 Video Entry / Access Control System

Commercial

2137

- Three entry points, expandable to 48
- POE ++ (Type 3) or 12-24 VDC
- Internet or cellular connection
- Program from a laptop, tablet or smartphone
- Geo Fencing*

App

- DKS Community app
- App available on App Store and Google Play
- Initiate video stream at any time from the app
- Activate door or gate from the app
- Check door/ gate status

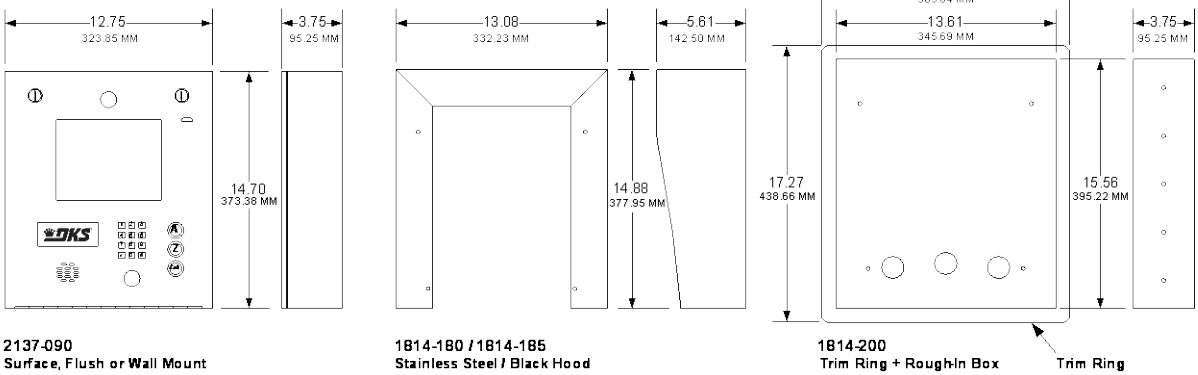

2137-090
Surface, Flush or Wall Mount

1814-180 / 1814-185
Stainless Steel / Black Hood

1814-200
Trim Ring + Rough-In Box

Model[1]	Users	Device Codes[2]	Entry Codes[3]	Internal Relays	Wiegand Inputs[4]	IP Camera	Cloud Programming[5]	Visitor Management[6]	Elevator Control[7]
2137	10,000	25 / each Dir Code	10,000	3	2	Yes	Yes	Yes	Yes

1. The 2137 must have an internet connection (wired or cellular) to operate. DKS Cloud subscription is required. If using a cellular connection with a system that is Flush mounted, an external cellular antenna will be required.
2. Up to 25 device codes can be added for each directory code.
3. Entry codes can be set to four (4) digits or five (5) digits in length.
4. Two 26-bit Wiegand inputs, expandable to 48 wired devices or 24 wireless devices. Expansion requires Tracker expansion boards (2358-010).
5. Program from a laptop, tablet, or smartphone.
6. Scheduled or one-time. Guest keypad codes.
7. Up to eight (8) elevators; 64 floors each elevator.

*Geo Fencing

When enabled, the Geo Fencing feature allows managers to limit door/gate operation from the app from 0.1 up to 99.9 miles. If the user is further away from the door/gate than the distance set, they will not be able to activate (open) it.

2137 Video Entry / Access Control System

Commercial

2137 Video Entry / Access Control System[1]

2137-090

1 – Requires an internet connection via ethernet or cellular.

Subscription Fees

Standard Residential Package monthly subscription fee is required for 2100 series systems to operate. See Section D1.

Subscription fee includes:

- VoIP for Voice Calling
- Video Calling (requires the DKS Community app on your smartphone)
- DKS Cloud database for programming and system management

The commands listed below require permission from the system administrator and may not be available to all residents.

- On command video monitoring (from your smartphone)
- Relay (door/gate) status (open – closed – held open)
- On command relay control (open – close – hold open)
- Scheduled relay control
- Entry code functions

2137 Cellular Kit Options[1]

2137-103 AT&T

2137-105 Verizon

1 – Additional monthly cellular fees apply.

2137 Mounting Accessories

1814-180 Stainless Steel Hood (12 ga)[1]

1814-185 Black Hood (12 ga)

1814-200 Flush Kit (Rough-in box + trim ring)

2137-100 Fan Kit[2]

2137-102 Battery Backup Kit

1 – Recommended for corrosive environments such as coastal areas.

2 – Recommended in hot environments.

Expansion Options

2358-010 Tracker Expansion Board

2351-080 Sgl Box[1] *(1 board max)*

2351-085 Sgl Box[1] + 1470-080 RF Module

2351-082 QUAD Box[1] Pre-wired *(4 boards max)*

1 – Includes one (1) 2358-010 board and 16V, 40 VA transformer.

Expansion Option Wireless Kits

2137-101 Wireless Wiegand Baseboard 900 MHz

This baseboard is installed on the 2100 series entry system control board and provides a wireless connection to 2358 tracker expansion boards.

1514-079 900 MHz antenna extension kit

1514-140 Wireless range test kit 900 MHz

Elevator Control

2348-040[1] Elevator control board + hardware

2348-080[2] Lockable enclosure

2348-081[3] Lockable enclosure large

1 – Includes board and mounting hardware.

2 – Includes one (1) 2348-010 board. Room for two (2) boards' total.

3 – Includes one (1) 2340-010 board. Room for four (4) boards' total.

1830 Series Connection Options

~~Cellular, TCP/IP Network, VoIP~~

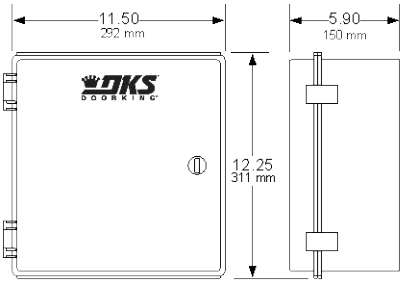

1800-080 / 1800-081 Cellular

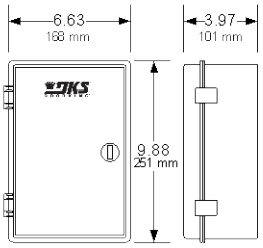

2334-080 / 2334-081 VoIP

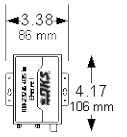

TCP/IP Adapters 1830-18x

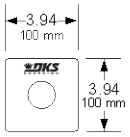

VoIP Adapter 1815-578

DKS Cloud is included with connection service subscription plans which allow programming from a laptop, tablet or smartphone. Programming with a dedicated PC is also available using the Remote Account Manager software - available for free download at doorking.com.

Cellular[1]

1800-080 Voice + Data

1800-081 Voice + Data (AP models only)

1. Cellular subscription required. See Section D1.

VoIP – TCP/IP Control box[1]

2334-080 VoIP – TCP/IP Control Box[2]

2334-081 VoIP – TCP/IP Control Box[3]

1. DKS VoIP or Data subscription required. See Section D1.

2. Use with 1830 Series systems only.

IMPORTANT! The 1830 circuit board MUST be Revision Z or higher, otherwise this product will not work.

3. Use with Access Plus systems only.

Accessories[1]

1514-014 Long Range Antenna 4GLTE

1 – 1800-080 and 1800-081 only.

TCP/IP Network Adapters

1830-185 (Manual setup)

1830-186[1] (Plug & Play)

1. DKS VoIP or Data over IP subscription required. See Section D1.

VoIP Adapter

1815-578[1]

1. DKS VoIP subscription required. See Section D1.

Programming Only (No Voice) Connection Options[1]

1508-055 RS232 to RS422 Conversion Kit

1815-037 USB to RS232 Adapter

1818-040 RS232 Connecting Cable 6-ft (1.8m)

1 – These options are used with a dedicated PC connected directly to the entry system control board. Programming with a dedicated PC is available using the Remote Account Manager software - available for free download at doorking.com.

Model 2348

Elevator Control

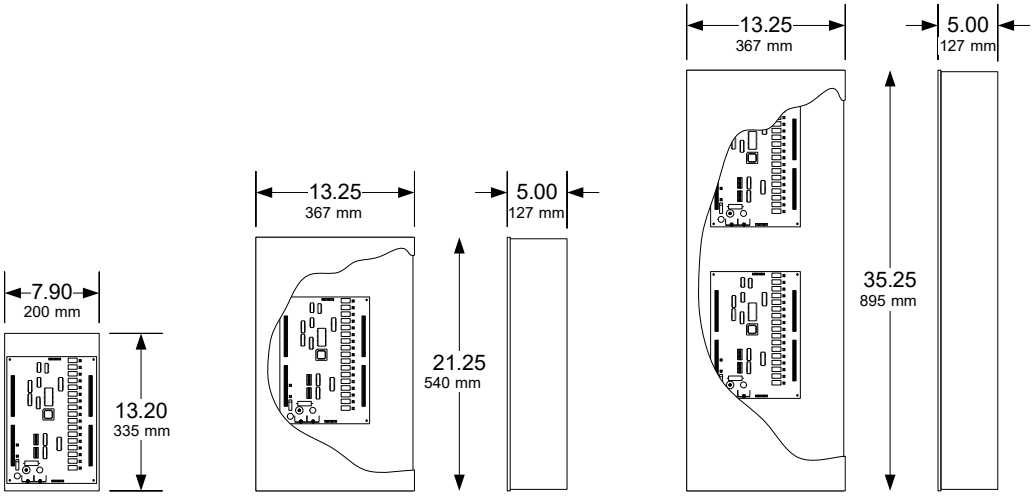

Elevator Control Board

2348-040

- Includes mounting hardware.

Enclosures[1]

2348-080

- Maximum two (2) 2348 boards.

2348-081

- Maximum four (4) 2348 boards.

1. Includes one (1) 2348 control board and power transformer.

Expansion Boards

Tracker Expansion Boards

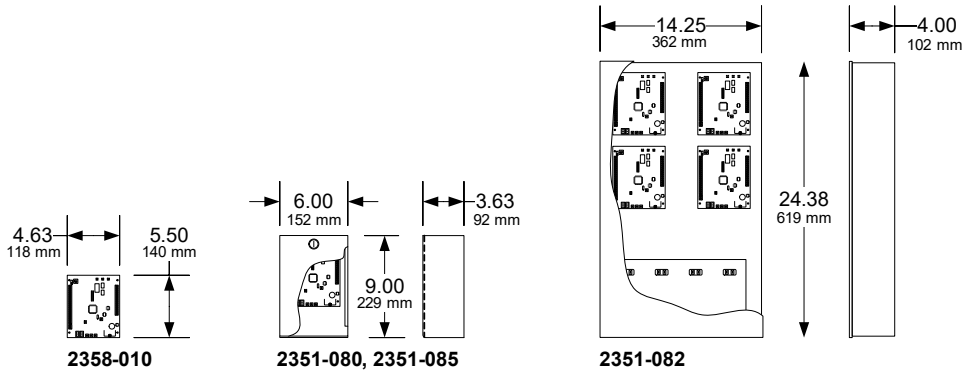

Tracker Expansion Board

2358-010

Enclosures

2351-080

- Includes one (1) 2358-010 board and 16V, 20 VA transformer.

2351-085

- Includes one (1) 2358-010 board, 1470-080 RF Module, 900 MHz and 16V, 20 VA transformer.

2351-082

- Includes one (1) 2358-010 board and 16V, 40 VA transformer.
- Can hold a maximum four (4) 2358-010 boards.
- Pre-wired.

Wireless Kits

Tracker Expansion Board Wireless Kits

900 MHz

IMPORTANT! 900 MHz wireless expansion can only be used with 2358 expansion boards, REV N or higher.

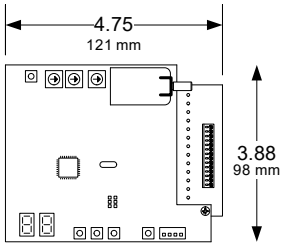

2333-080 Baseboard

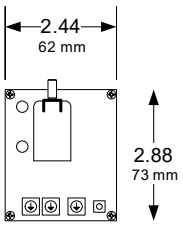

1470-080 Expansion

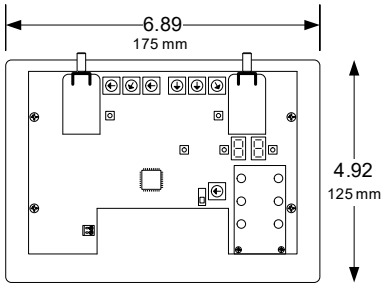

2332-080 Repeater

Baseboard Kit (80/90 Series Systems Only)

2333-080 900 MHz

- Plugs into the 1830 series control board.
- Includes antenna kit and vandal resistant disk antenna.

Expansion Board Kit (2358 Tracker Boards Only)

1470-080 900 MHz

- Plugs into the 2358 expansion board.
- Includes 6-inch and vandal resistant disk antenna.

Dual Channel Repeater

2332-080 900 MHz

- Extends the range when multiple 1470 or 1489 kits are in use.

Accessories

1514-079 Antenna Kit 900 MHz

- Includes 6-inch antenna, mounting bracket and 13-feet cable.

8064-046 Extension Cable

Antennas

1514-019 6-inch Antenna 900 MHz

1514-028 Disk Antenna 900 MHz

Field Range Test Kit

1514-140 900 MHz

- Use to verify a good wireless connection between base and remote stations.

Mounting Kits

Entry System Mounting Kits

Use with 1810 and 1833, 1834, 1835, 1837 - 80 Series only

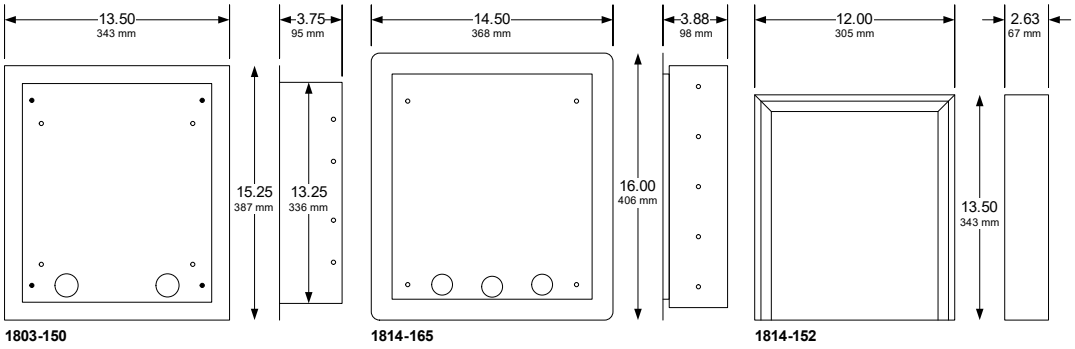

Use with 1834, 1835, 1837 - 90 Series only and 2137

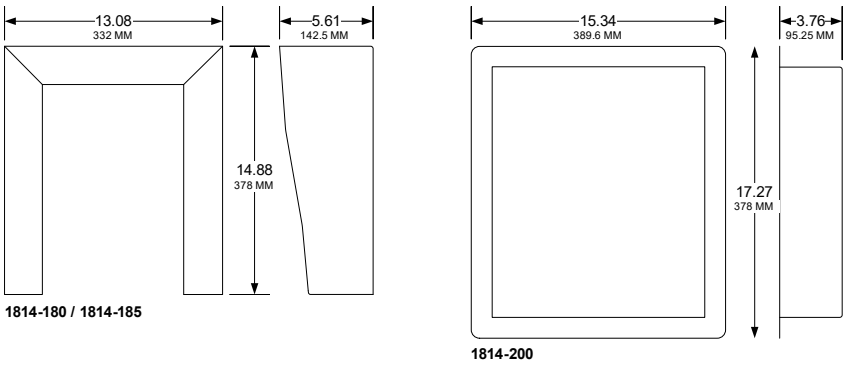

80 Series Only

Surface Mount Recess Kit - Black

1803-150

- Use with surface mount 1810, 1833, 1834, 1835 and 1837 80 Series only.

Flush Kit Stainless Steel

1814-165

- Use with flush mount 1810, 1833, 1834, 1835 and 1837 80 Series only.

Surface Mount Adapter for Flush Units

1814-152

- Allows a flush mount unit to be mounted directly to a flat surface. Indoor use only.
- Use with flush mount 1810, 1833, 1834, 1835 and 1837 80 Series only.

90 Series and 2137 Only

Hood – Stainless Steel

1814-180

- Use with 1834-090, 1835-090, 1837-090 and 2137 systems only.

Hood – Black

1814-185

- Use with 1834-090, 1835-090, 1837-090 and 2137 systems only.

Flush Kit Stainless Steel (rough-in box + trim ring)

1814-200

- Use with 1834-090, 1835-090, 1837-090 and 2137 systems only.

General Purpose Utility Enclosures

Telephone Entry System Accessories

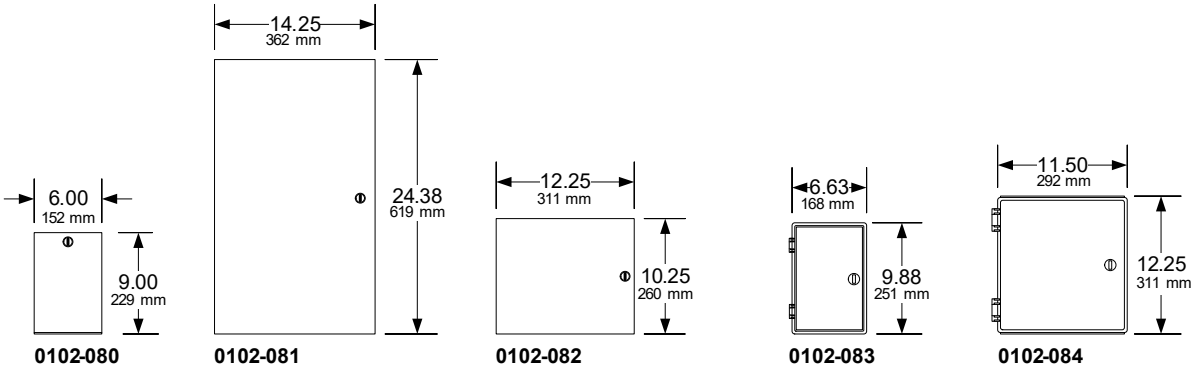

General purpose enclosures have no power receptacles or terminal strips, carry no warranty and are not listed.

0102-080 Small lockable metal enclosure
0102-081 Large lockable metal enclosure
0102-082 Medium lockable metal enclosure
0102-083 Small lockable plastic enclosure
0102-084 Medium lockable plastic enclosure

Part Number	Height	Width	Depth	Material	Lockable
0102-080	9.00 (229mm)	6.00 (152mm)	3.63 (92mm)	Metal	Yes
0102-081	24.38 (619mm)	14.25 (362mm)	4.00 (102mm)	Metal	Yes
0102-082	10.25 (260mm)	12.25 (311mm)	4.25 (108mm)	Metal	Yes
0102-083	9.88 (251mm)	6.63 (168mm)	4.00 (102mm)	Plastic	Yes
0102-084	12.25 (311mm)	11.50 (292mm)	6.00 (152mm)	Plastic	Yes

Accessories

Handset Kits, Isolation Transformers, Miscellaneous, CCTV Camera Kits

Handset Conversion Kit

1807-012
Handset, adapter, hanger and speaker cover

Replacement Handset

1807-006

Isolation Transformers

1830-140 16V (363ma)
Use with 1802, 1808, 1810, 1812 Plus & AP Systems

1830-141 24V (500ma)
Use with 1812 Classic

1830-142 16V (727ma)
Use with 1834, 1835, 1837

Miscellaneous

1506-081 Secondary Keypad surface mount

1506-091 Secondary Keypad flush mount

1801-008 Backup Battery 12-Volt .8 AH

1804-193 External Speaker
Use in high noise areas

2600-584 Heater Kit

2600-588 Heater Kit

2600-582 LCD Heater Kit

1816-070 Line Sense Relay

CCTV Camera Kit – High Resolution

1812-145

High resolution color camera kit (camera, mounting bracket, wire harness, power supply)

Use this camera with the following models:

1802-082, 1802-089, 1802-090, 1802-091, 1802-092

1808-081, 1808-082, 1808-083, 1808-084, 1808-085

1810-084, 1810-090, 1810-096

1812-088, 1812-093, 1812-094

1833-080, 1833-084

1834-084, 1834-089

1835-084, 1835-089

1837-080, 1837-084, 1837-089

1838-120, 1838-021, 1838-122, 1838-123, 1838-124

CCTV Camera Kit – High Resolution

1812-147

High resolution color camera kit (camera, mounting bracket, wire harness, power supply)

Use this camera with the following models:

1810-080, 1810-088, 1810-095

1812-081, 1812-087, 1812-089, 1812-090, 1812-091, 1812-092, 1812-095, 1812-096, 1812-097, 1812-098, 1812-099

1815-247, 1815-248, 1815-249, 1815-250, 1815-251

1834-080, 1834-090

1835-080, 1835-090

1837-090

Video Adapter

1812-039

Converts coax to twisted pair for wire runs of up to 3000-ft (B/W) or 1600-ft (color), two required

Specifications subject to change without notice.

Replacement Components

Electronic Components

Circuit Boards

1800-009
Use with 1800-081 only (Access Plus Cellular)

1800-010
Use with 1800-080 only (Voice + Data Cellular)

1862-010
Use with 1802, 1802-EPD, 1808, 1810, 1819

1863-010
Use with all “P” series lobby panels

1871-010
Use with 1812 Classic only

1971-010
Use with 1812 Plus only

1885-010
Use with 1816 and 1820 only

1833-010
Use with 1833 only

1834-010
Use with 1834-080 and 1834-084 only

1834-009
Use with 1834-089 and 1834-090 only

1835-010
Use with 1835-080 and 1835-084 only

1835-009
Use with 1835-089 and 1835-090 only

1837-010
Use with 1837 only

1838-010
Use with 1838 only

1970-010
Use with 1802 AP, 1808 AP, 1810 AP, 1812 AP, 1838 AP

Keypads

1895-017
Keypad no letters

1895-019
Keypad 10-pin

1804-038
Ribbon cable for 1895-016 & 1895-017

1804-155
Keypad (no letters) & ribbon cable

1804-156
Keypad (with letters) & ribbon cable

1895-023
Keypad, white back lighted

1895-032
Keypad, green back lighted

1895-060
Lighted keypad-green, A-Z-CALL button retrofit kit

1804-158
Lighted keypad-green, retrofit kit

LCD Displays

1891-010 Single-Line 20 Character
Use with 1834, 1835

1896-012 Eight-Line 20 Character
Use with 1837 only

1890-010 Single-Line 8 Character
Use with 1802, 1803 and 1810

1902-010 Single-Line 16 Character
Use with 1802 EPD only

Miscellaneous

1998-020
Replacement microphone kit

1998-010
Replacement microphone board

1997-190
Microphone wire harness for 1998-010 only

1804-290
5-watt speaker (square)

1817-190
Oval speaker

LED Light Kits

1804-700
Use with 1810 surface mount

1804-701
Use with 1802

1804-702
Use with 1808, 1834, 1835 surface mount

1804-703
Use with 1710 directory

1804-704
Use with 1812

1804-707
Use with 1810 flush mount

Blank Page