# Section 1

## Product Reference Guide – January 2026

# Vehicular Traffic Control

| Date | Page | Comment |
|---|---|---|
| 1-1-26 | All | Reference guide published. |
| 2-11-26 | 23, 37, 52 | Updated the part numbers for the 2100 series loop detectors. |
| 2-11-26 | 23, 37 | Updated part number for the 2100 series plugin receiver. |
| 3-5-26 | 9, 13, 15 | Updated page references under pedestrian protection. |
| 3-24-26 | 52 | Added 9402-090 loop detector. |
| 4-13-26 | 9, 13, 15, 23 | Updated optional heater kit information. |
| 4-21-26 | 52 | Removed 9402-061 wire harness. Added 9402-062 wire harness. |
| 4-29-26 | 11 | Added notes under the 8080-295 breakaway hardware kit. |
| 4-30-26 | 13 | Added notes under the 1602 Octagonal 17-Ft arm extension options. |
| 5-26-26 | 22, 36 | Updated operator specifications. |
| 6-23-26 | 13 | Corrected part number in notes section. |
| 7-13-26 | 9, 13, 15 | Updated optional heater kit information. |
| 7-14-26 | 53 | Added 1200-221 3-button control station. |
| 7-24-26 | 18 | Added 1610-097. 1610-098 and 1610-241 spike components with red finish. |
| 7-27-26 | 12 | Added note that the 1602 is for limited use only and is not a high cycle operator. |
| 7-30-26 | 10 | Corrected the wood arm measurement. |
| 10-20-26 | 23, 37 | Removed RS485 Bi-parting cable. |
| 10-30-26 | 13 | Added 1601-567 to arm options. |
| | | |
| | | |
| | | |

# Blank Page

# UL 325 – February 2023

Requirements mandated by the safety standard (UL 325) that DKS gate operators are listed to require that photo-beams and contact edges used for entrapment protection must be monitored. Entrapment protection must be provided for the gate system where the risk of entrapment exist. The gate operator will not run without one or more external entrapment protection devices installed in each direction of travel. Check the gate operator installation manual for a list of external entrapment protection devices that can be used with DKS gate operator products.

The August 2018 update to the safety standard requires that a minimum of two (2) independent means of entrapment protection must be provided in each direction of travel where the risk of entrapment exists. The inherent system in DKS gate operators is active in both directions of travel, so this qualifies as one means of entrapment protection in each direction. The second means will be an external device, such as a non-contact (Type B1) or a contact (Type B2) sensor as required in each direction. The actual number of external devices required is dependent on the gate system layout and the number of entrapment areas that will need to be protected. Installers will have to identify all potential areas where the risk of entrapment exist and how best to protect those areas. For example, some gates may require two (or more) external devices in each direction of travel to protect all potential areas of entrapment. The standard also mandates that all components used for monitoring purposes for external devices must be factory installed internally within the device.

There is an exception for swing gates and vertical lift gates regarding the minimum of two entrapment protection devices in each direction of travel. For example, if on a swing gate system there is no potential for entrapment in the opening direction, then only the close direction will require a minimum of two means of entrapment protection. Installers will have to determine if any entrapment hazards exist in the opening direction, and if so, then those areas will have to be protected with external devices.

Vertical lift gates require two means of entrapment protection in the down cycle, but will only require one means of entrapment protection in the up cycle. The model 1175 is considered to be a vertical lift gate operator for entrapment protection means requirements.

Barrier (parking) gate operators that are installed in such a way that the parking arm does not come closer than 16 inches to a rigid object are not required to protect against entrapment.

The table below shows the minimum entrapment protection requirements for each type of gate operator in the scope of the UL 325 Standard for Safety.

| | Opening | Closing |
|---|---|---|
| Horizontal Slide Gate | 2 | 2 |
| Horizontal Swing Gate | 2* | 2* |
| Vertical Pivot Gate | 2 | 2 |
| Vertical Lift Gate | 1 | 2 |
| Horizontal Bifold Gate | 2 | 2 |
| * For a horizontal swing gate operator, at least two independent entrapment protection means are required in each direction of travel. Except, if there is no entrapment zone in one direction of travel, only one means of entrapment protection is required in that direction of travel; however, the other direction must have two independent entrapment protection means. | | |

# Blank Page

# Table of Contents

**Overhead / Parking Gate Operators / Traffic Spike Systems**

Model 1175 ..... 6
Model 1601 ..... 8
Model 1601 Arm Options ..... 10
Model 1602 ..... 12
Model 1603 ..... 14
Model 1603 Arm Options ..... 16
Model 1610 Traffic Control Spikes ..... 18
Warning Signs / Traffic Signals ..... 20
Overhead / Barrier Gate Operator Parts ..... 21

**Swing Gate Operators**

Model 2160 ..... 22
Model 6006, 6004, 6400 ..... 24
Model 6050 / 6100 ..... 26
Model 6300 ..... 28
Model 6500 ..... 30
Model 6524 ..... 32
Swing Gate Accessories ..... 34
Swing Gate Operator Parts ..... 35

**Slide Gate Operators**

Model 2170 ..... 36
Model 9000 ..... 38
Model 9024 ..... 40
Model 9050 / 9100 ..... 42
Model 9150 ..... 44
Slide Gate Accessories ..... 46
Slide Gate Operator Parts ..... 48

**Entrapment Protection and Vehicle Detection**

Entrapment Protection Devices Non-Contact Type B1 ..... 50
Entrapment Protection Devices Contact Type B2 ..... 51
Loop Detectors and Loops ..... 52

**Accessories**

Control Stations ..... 53

**Back-up Power Inverters**

Model 1000 ..... 54

# 1175 Overhead Gate Operator

**Indoor Use Only**

**1175**

- Adjustable Limits
- Plug-in Loop Detector Ports
- Built-in power and reset switches
- Gate Tracker Data Output
- Steel Frame
- #40 Roller Chain
- Heavy-duty 3-in (76.2 mm) Rails
- Up to 14 Ft (4.27 m) high gate

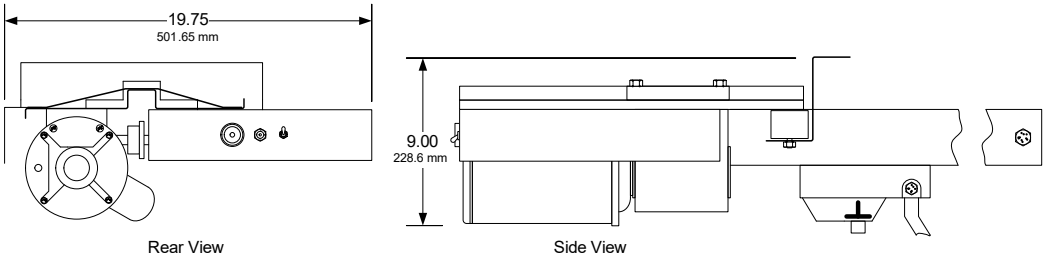


| Model | Maximum Gate Height | Overall Length | Mount Options[1] | Class of Operation[2] | Voltage | HP | Power Outlets | Maximum Cycles / Day | Loop Ports[3] | Adjustable Clutch[4] |
|---|---|---|---|---|---|---|---|---|---|---|
| 1175 | 8 Ft<br>2.43 m | 12.25 Ft<br>3.73 m | Ceiling | II, III, IV | 115 VAC | 1/2 | N/A | Continuous | 2 | No |
| | 10 Ft<br>3.05 m | 14.25 Ft<br>4.34 m | | | | | | | | |
| | 12 Ft<br>3.66 m | 16.25 Ft<br>4.95 m | | | | | | | | |
| | 14 Ft<br>4.27 m | 18.25 Ft<br>5.56 m | | | | | | | | |

1. If the operator is mounted less than 8 feet above the ground, the optional powerhead cover (1175-020) is required.
2. II = Commercial; III = Limited Access; IV = Restricted Access.
3. Plug-in loop detector ports; open and reverse. DoorKing plug-in loop detectors only.
4. Operator is equipped with a Type A inherent detection system.

**WARNING! LTL Carriers are now charging additional fees for any shipment that is eight (8) feet in length or greater. These fees can be substantial.**

# 1175 Overhead Gate Operator

## Indoor/Covered Use Only

**Powerhead Assembly - Required**

1175-380

**Powerhead Cover - Optional**

1175-020

*Required if powerhead assembly is mounted less than 8 feet (2.43m) above the ground.*

**Rail Assembly – One (1) Required**

1150-225 (8 ft. high gate)

1150-226 (10 ft. high gate)

1150-227 (12 ft. high gate)

1150-228 (14 ft. high gate)

**Entrapment Protection - Required**

*Use Type B1 (non-contact) and/or Type B2 (contact) entrapment protection devices to protect all areas where the risk of entrapment exist - see pages 50 - 51.*

***Operator will not run without entrapment protection device(s) connected to the controller board. See installation manual for more information.***

**Loops and Loop Detectors - Recommended**

*See page 52 for a complete list of all loop detectors, prefabricated loops and loop accessories available.*

**Surge Suppression - Recommended**

1879-080 High Voltage (120 VAC)

**Backup Power Inverters - Optional**

1000-083 1000-Watt, Pure Sine Wave

1000-045 Inverter Post Mount Kit

*See page 54 for more information.*

# 1601 Parking Gate Operator

## Magnetic Limits

**1601**

- Magnetic Limits
- Plug-in Loop Detector Ports
- Gate Tracker Data Output
- Up input memory buffer
- Down memory buffer
- Includes photo-reflective beam (8080-057)
- Built-in power and operate switches
- Two convenience outlets
- Left or right hand mount
- 90° in approximately 2.5 sec.

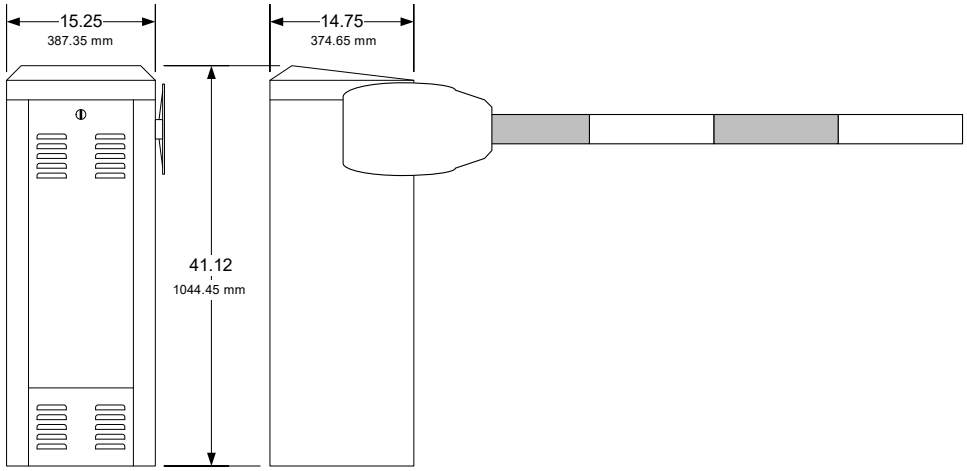

1601-38x / 1601-48x

| Model | HP | Class of Operation[1] | Voltage[2] | HP | Power Outlets | Cycle Time | Loop Ports[3] | Arm Type | Maximum Length | Fold Option[4] | Breakaway Option | Lighted[5] |
|---|---|---|---|---|---|---|---|---|---|---|---|---|
| 1601-38x<br>1601-48x | 1/2 | II, III, IV | 115 208<br>230 460<br>575 VAC | Left<br>Right | 2 | 90° /<br>2.5 sec | 2 | Aluminum Octagonal | 14 Ft.<br>4.27 m | Yes | Yes | Optional |
| | | | | | | | | Aluminum Round | 14 Ft.<br>4.27 m | Yes | Yes | No |
| | | | | | | | | Wood | 14 Ft.<br>4.27 m | Yes | No | No |
| | | | | | | | | Plastic | 12 Ft.<br>3.66 m | Yes | No | No |

1. II = Commercial; III = Limited Access; IV = Restricted Access.
2. High voltage kit (P/N 2600-266) required for 208 Volt and higher.
3. Plug-in loop detector ports; up loop and down loop. DoorKing plug-in loop detectors only.
4. Maximum arm length using the fold option is 12 Ft. (3.66 m).
5. Octagonal aluminum arm uses Red/Green LED lighting with built-in reverse edge.

**WARNING! LTL Carriers are now charging additional fees for any shipment that is eight (8) feet in length or greater. These fees can be substantial.**

# 1601 Parking Gate Operator

## Magnetic Limits

**See pages 10-11 for 1601 operator arm selection.**

### Choose an Operator[1]

1601-380 1/2 HP White Housing

1601-381 1/2 HP w/COO[2] White Housing

1601-480 1/2 HP Gray Housing

1601-481 1/2 HP w/COO[2] Gray Housing

*1. Operators include 8080-057 photo-reflective beam.*

*2. Convenience Open Option provides a method to raise the arm when AC power has failed.*

### High Voltage Kit - Optional

2600-266 High Voltage Kit

*Allows the operator to be powered from 208, 230, 460 or 575 VAC source voltage.*

### Required for Pedestrian Protection Photo Beam

8080-057 Photo-Reflective Beam

9411-010 Loop Detector

*See pages 50-51 for all protection devices available. See page 52 for a complete list of all loop detectors and accessories available.*

### Surge Suppression - Recommended

1879-080 High Voltage (120 VAC)

### Backup Power Inverter - Optional

1000-083 1000-Watt, Pure Sine Wave

1000-045 Inverter Post Mount Kit

*See page 54 for more information.*

### Accessories

1601-281 Arm Hub Cover White[1]

1601-283 Arm Hub Cover Gray[1]

1603-221 Traffic Signal 12 VDC

1603-222 Traffic Signal 12 VDC w/35” Post

1601-092 Heater Kit 115 VAC

1601-093 Fan Kit 115 VAC[2]

1601-154 Heater Kit w/Fan 115 VAC

1601-270 Manual Crank Kit

*1. Arm hub cover is included with the 1601 operator. Shown here for replacement purposes only.*

*2. Use in hot, humid environments.*

# 1601 Parking Gate Arm Selection

## Arms, Hardware Kits, Edges

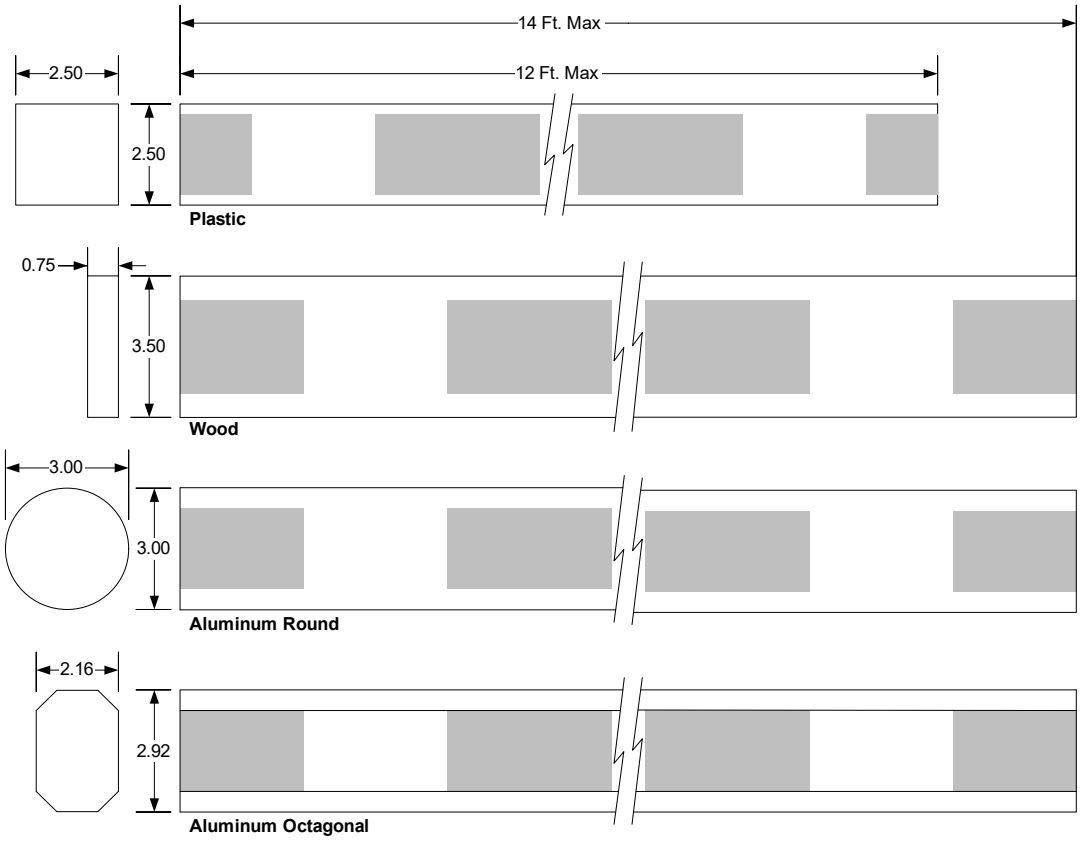


| Type | Maximum Length | Fold Option[1] | Breakaway Option | Lighted Option[2] |
|---|---|---|---|---|
| Plastic[3] | 12 Ft.<br>3.66 m | Yes | No | No |
| Wood[3] | 14 Ft.<br>4.27 m | Yes | No | No |
| Aluminum Round | 14 Ft.<br>4.27 m | Yes | Yes | No |
| Aluminum Octagonal | 14 Ft.<br>4.27 m | Yes | Yes | Yes |

1. Maximum arm length using the fold option is 12 Ft. (3.66 m).
2. Octagonal aluminum arm uses Red/Green LED lighting with built-in reverse edge. Edges cannot be used with the 2 Ft. arm extension kit.
3. Plastic and wood arms are not recommended for use in high wind areas.

**Quantities of 1-2 are not recommended as the arms can be easily damaged in transit. Quantities of 3-15 are shipped in bundles of three (3) in heavy-duty shipping tubes. Quantities greater than 15 are shipped in wooded crates.**

**WARNING! LTL Carriers are now charging additional fees for any shipment that is eight (8) feet in length or greater. These fees can be substantial.**

# 1601 Parking Gate Arm Selection

## Arms, Hardware Kits, Edges

### Octagonal Aluminum Arms

1601-555 14-Ft (4.27m)

1601-567 Arm 14 Ft (4.27 m), 2-Piece[1]

1601-812 Folding Arm Kit 12 Ft (3.66 m)[2,3].

*1. Ships in 8-ft (2.4m) long box.*

*2. Minimum ceiling height for this kit is 10 feet (3.04 m)*

*3. Not compatible with 8080-295 Breakaway kit.*

### Octagonal Arm Hardware Kits - One (1) Required

1601-242 Hardware Kit[1]

8080-235 Reverse Edge Hardware Kit[2]

8080-295 Breakaway Arm Hardware Kit[3]

1601-297 High Wind Bridge Support Kit[4]

*1. Use this kit for arm only – no reverse edge.*

*2. Use this kit for arms with reverse edge (includes wiring harness).*

*3. Use this kit to add breakaway arm feature (includes wiring harness). If adding the breakaway kit to the 1601-381, 1601-481 operator with the convenience open feature, you will need the 1601-401 magnetic contact that was included with the 1601-381, 1601-481 operator.*

*4. Use with 8080-295 breakaway kit in areas with higher-than-normal wind loads.*

### Octagonal Arm Edges[1] - Optional

8080-605 Reverse Edge 5 Ft.

8080-606 Reverse Edge 6 Ft.

8080-609 Reverse Edge 9 Ft.

8080-612 Reverse Edge 12 Ft.

8080-905 Reverse Edge 5 Ft Lighted

8080-906 Reverse Edge 6 Ft Lighted

8080-909 Reverse Edge 9 Ft Lighted

8080-912 Reverse Edge 12 Ft Lighted

8080-922 Folding Arm Reverse Edge Lighted[2]

8080-089 Bumper Edge 13 Ft (not a reverse edge)

*1. Edge must be at least 2-Ft shorter than the overall arm length.*

*2. Includes two (2) 5 Ft lighted reverse edges and wire harnesses.*

### Arm Conversion Kits Available

8080-532 Round Arm to Octagonal Arm

8080-538 Round Arm to Octagonal Breakaway Arm

### Round Aluminum Arms

1601-516 14-Ft (4.27m)

1601-522 14-Ft (4.27m)[1]

1601-524 Arm 14 Ft (4.27 m), 2-Piece[2]

1601-610 Arm 12 Ft (3.66 m) Folding[3,4]

1601-528 Arm 14 Ft (4.27 m), 2-Piece Breakaway[2]

*1. Use this arm with the 8080-295 hardware kit.*

*2. Ships in 8-ft (2.4m) long box.*

*3. Minimum ceiling height for this kit is 10 feet (3.04 m)*

*4. Not compatible with 8080-295 Breakaway kit.*

### Round Arm Hardware Kits – One (1) Required

1601-242 Arm Hardware Kit

8080-295 Breakaway Arm Hardware Kit[1]

1601-297 High Wind Bridge Support Kit[2]

*1. Use this kit to add breakaway arm feature (includes wiring harness). If adding the breakaway kit to the 1601-381, 1601-481 operator with the convenience open feature, you will need the 1601-401 magnetic contact that was included with the 1601-381, 1601-481 operator.*

*2. Use with 8080-295 breakaway kit in areas with higher-than-normal wind loads.*

### Rectangular Wood Arms

1601-348 14-Ft (4.27m)

1601-384 Arm 12 Ft (3.66 m) Folding Arm[1]

*1. Ships in 8-ft (2.4m) long box.*

### Rectangular Wood Arm Hardware Kit - Required

1601-240 Arm Hardware Kit

### Square Plastic Arms

1601-571 12-Ft (3.66m)

1601-383 Arm 12 Ft (3.66 m) Folding Arm[1]

*1. Ships in 8-ft (2.4m) long box.*

### Square Plastic Arm Hardware Kit - Required

1601-241 Hardware Kit

# 1602 Parking Gate Operator

## Magnetic Limits

**1602**

- Magnetic Limits
- Plug-in Loop Detector Ports
- Gate Tracker Data Output
- Up input memory buffer
- Down memory buffer
- Includes photo-reflective beam (8080-057)
- Built-in power and operate switches
- Two convenience outlets
- Left or right hand mount
- 90° in approximately 5.5 sec.

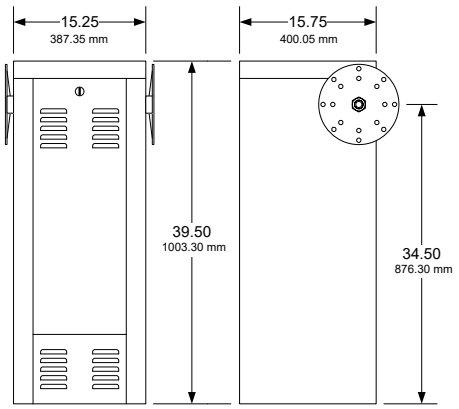


| Model | Mount Options | Class of Operation[1] | Voltage[2] | HP | Power Outlets | Cycle Time | Loop Ports[3] | Arm Type | Maximum Length | Fold Option | Breakaway Option | Lighted Option[4] |
|---|---|---|---|---|---|---|---|---|---|---|---|---|
| 1602 | Left or Right | II, III, IV | 115 208 230 460 575 VAC | 1 | 2 | 90° 5.5 sec | 2 | Single Octagonal | 17 Ft.[5] 5.18 m | No | Yes | Yes |
| | | | | | | | | Wishbone Octagonal or Round | 20 Ft. 6.09 m | No | No | Yes No |
| | | | | | | | | | 24 Ft. 7.31 m | No | No | Yes No |
| | | | | | | | | | 27 Ft. 8.23 m | No | No | Yes No |
| | | | | | | | | Wood | 20 Ft. 6.09 m | No | No | No |

1. II = Commercial; III = Limited Access; IV = Restricted Access.
2. High voltage kit (P/N 2600-266) required for 208 Volt and higher.
3. Plug-in loop detector ports; up loop and down loop. DoorKing plug-in loop detectors only.
4. LED lighted option available on the octagonal arms only.
5. 17-foot arm is a combination of the 1601-555 arm plus the 1602-303 arm extension kit.

**NOTE: The 1602 is designed for limited usage – it is not a high cycle operator.**

**WARNING! LTL Carriers are now charging additional fees for any shipment that is eight (8) feet in length or greater. These fees can be substantial.**

# 1602 Parking Gate Operator

## Magnetic Limits

### Choose an Operator[1]

1602-090 1 HP

1602-091 1 HP w/COO[2]

*1. Operators include 8080-057 photo-reflective beam and built-in manual crank release system.*

*2. Convenience Open Option provides a method to raise the arm when AC power has failed.*

### High Voltage Kit - Optional

2600-266 High Voltage Kit

*Allows the operator to be powered from 208, 230, 460 or 575 VAC source voltage.*

### Required for Pedestrian Protection Photo Beam

8080-057 Photo-Reflective Beam

9411-010 Loop Detector

*See pages 50-51 for all protection devices available. See page 52 for a complete list of all loop detectors and accessories available.*

### Surge Suppression - Recommended

1879-080 High Voltage (120 VAC)

### Backup Power Inverter - Optional

1000-083 1000-Watt, Pure Sine Wave

1000-045 Inverter Post Mount Kit

*See page 54 for more information.*

### Accessories

8060-082 RF Kit (Receiver + MicroPlus TX (1)

1603-221 Traffic Signal 12 VDC

1603-222 Traffic Signal 12 VDC w/35" Post

1601-092 Heater Kit 115 VAC

1601-154 Heater Kit w/fan 115 VAC

1601-093 Fan Kit 115 VAC[1]

*1. Use in hot, humid environments.*

### Octagonal Wishbone Aluminum Arms

1602-282 3-Piece, 20 Ft (6.09 m)

1602-284 3-Piece, 24 Ft (7.31 m)

1602-287 3-Piece, 27 Ft (8.23 m)

### LED/Reverse Edge Kits[1] - Optional

1602-982 for use with 1602-282 arm

1602-984 for use with 1602-284 arm

1602-987 for use with 1602-287 arm

*1. Kits include required LED/Reverse edge strips, power transformer, wire harness and hardware.*

### Round Wishbone Aluminum Arms

1602-162 3-Piece, 20 Ft (6.09 m)

1602-164 3-Piece, 24 Ft (7.31 m)

1602-166 3-Piece, 27 Ft (8.23 m)

### Wood Wishbone Arm

1602-340 3-Piece, 20 Ft (6.09 m)

1602-041 Hardware Kit - Required

### Octagonal Straight Aluminum Arm Options

1601-555 1-Piece, 14 Ft (4.27 m)

1601-567 2-Piece, 14 Ft (4.27 m)[1]

1602-303 3 Ft (.91 m) Arm Extension[2]

1601-242 Hardware Kit[3]

8080-235 Reverse Edge Hardware Kit[4]

8080-295 Breakaway Arm Hardware Kit[5]

1601-401 Magnetic Sensor[6]

8080-912 Reverse Edge 12 Ft (3.65 m) Lighted.

8080-915 Reverse Edge 15 Ft (4.57 m) Lighted.

1601-297 High Wind Bridge Support Kit[7]

*1. Ships in 8-ft (2.4m) long box.*

*2. Used in combination with the 1601-555 arm to create a 17 Ft arm. Kit cannot be used with the 1601 or 1603 operators.*

*3. Use this kit for arm only – no reverse edge.*

*4. Use this kit for arms with 8080-912 or 8080-915 reverse edge.*

*5. Use this kit to add breakaway arm feature (includes wiring harness). If using this kit with the 1602-091 operator, the 1601-401 magnetic sensor is also required.*

*6. This sensor is required if adding the breakaway arm feature to the 1602-091 operator.*

*7. Use with 8080-295 in areas with higher-than-normal wind loads.*

# 1603 Auto-Spikes / Operator

## Automotive / Light Trucks Only

**1603**

- Magnetic Limits
- Plug-in Loop Detector Ports
- Gate Tracker Data Output
- Up input memory buffer
- Down memory buffer
- Built-in power switches
- Two convenience outlets
- Left or right hand mount
- Galvanized steel housing
- 90° in approximately 2.5 sec.

**Spikes**

- ¼ Multi-Grip steel
- 20,000 per axle weight limit
- 14 Ft. maximum width
- **1615-081 Warning Sign required**
- **Not recommended for use in areas subject to freezing weather**

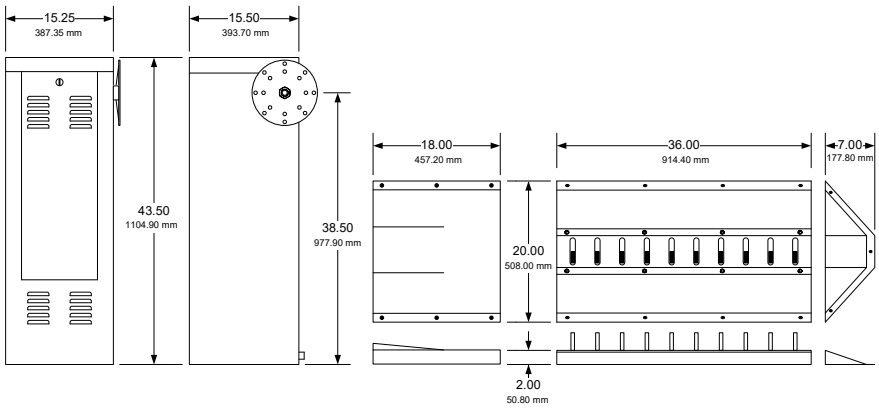


| Model | Mount Options | Class of Operation[1] | Voltage[2] | HP | Power Outlets | Cycle Time | Loop Ports[3] | Arm Type | Maximum Length | Fold Option[4] | Breakaway Option | Lighted Option |
|---|---|---|---|---|---|---|---|---|---|---|---|---|
| 1603 | Left or Right | II, III, IV | 115 208 230 460 575 VAC | 1/2 | 2 | 90° 2.5 sec | 2 | Aluminum Octagonal | 14 Ft. 4.27 m | Yes | No | Yes |
| | | | | | | | | Aluminum Round | 14 Ft. 4.27 m | Yes | No | No |

1. II = Commercial; III = Limited Access; IV = Restricted Access.
2. High voltage kit (P/N 2600-266) required for 208 Volt and higher.
3. Plug-in loop detector ports; up loop and down loop. DoorKing plug-in loop detectors only.
4. Maximum arm length using the fold option is 12 Ft. (3.66 m).

**Installation and use of spike components in areas that are subject to freezing weather with potential for snow and ice accumulation is not recommended. With advancements in tire construction, and with the many different types, sizes and styles of tires, we cannot guarantee that traffic control spikes will penetrate all tires. For use with automotive and light pickup trucks only.**

**WARNING! LTL Carriers are now charging additional fees for any shipment that is eight (8) feet in length or greater. These fees can be substantial.**

# 1603 Auto-Spikes / Operator

## Automotive / Light Trucks Only

**See pages 16-17 for 1603 operator arm selection.**

### Choose an Operator[1]

1603-380 1/2 HP

1603-381 1/2 HP w/COO[2]

*1. Operators include built-in manual crank release system.*

*2. Convenience Open Option provides a method to raise the arm when AC power has failed.*

### High Voltage Kit - Optional

2600-266 High Voltage Kit

*Allows the operator to be powered from 208, 230, 460 or 575 VAC source voltage.*

### Backup Power Inverter - Optional

1000-083 1000-Watt, Pure Sine Wave

1000-045 Inverter Post Mount Kit

*See page 54 for more information.*

### Surge Suppression - Recommended

1879-080 High Voltage (120 VAC)

### Required for Pedestrian Protection Photo Beam

8080-057 Photo-Reflective Beam

9411-010 Loop Detector

*See pages 50-51 for all protection devices available. See page 52 for a complete list of all loop detectors and accessories available.*

### Spike Components

1603-168 Drive Ext 18 in (457 mm) - Required

*Choose spike components from below*

1603-165 Spike Section 3 Ft (0.91 m)

1603-170 Tunnel Extension 18 in (457 mm)

1610-240 End Cap

### Warning Sign - Required

1615-081 Auto-Spike Warning Sign

*Illuminated warning sign MUST be used with the auto-spike system. Warning sign mounts on a 3.5 in (89 mm) post.*

### Traffic Signal - Recommended

1603-222 12 VDC w/35” (.89m) Post

1603-223 12 VDC w/95” (2.4m) Post

### Accessories

1601-281 Arm Hub Cover[1]

1601-092 Heater Kit 115 VAC

1601-154 Heater Kit w/Fan 115 VAC

1601-093 Fan Kit 115 VAC[2]

1603-001 Replacement Manual Crank Handle

*1. Arm hub cover is included with the 1603 operator. Shown here for replacement purposes only.*

*2. Use in hot, humid environments.*

# 1603 Auto-Spikes / Operator Arm Selection

## Arms, Hardware Kits, Edges

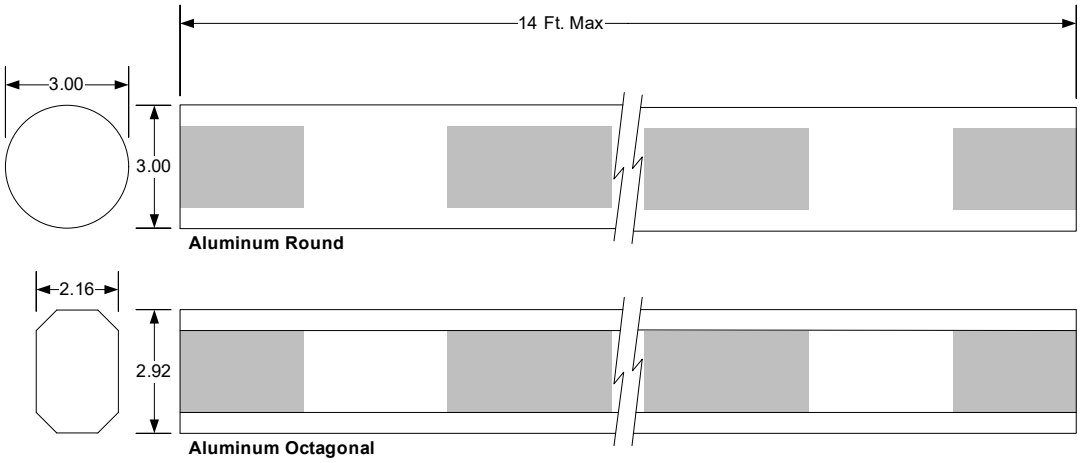


| Type | Maximum Length | Fold Option[1] | Breakaway Option | Lighted Option[2] |
|---|---|---|---|---|
| Aluminum Round | 14 Ft.<br>4.27 m | Yes | No | No |
| Aluminum Octagonal | 14 Ft.<br>4.27 m | Yes | No | Yes |

1. Maximum arm length using the fold option is 12 Ft. (3.66 m).
2. Octagonal aluminum arm uses Red/Green LED lighting with built-in reverse edge.

**Quantities of 1-2 are not recommended as the arms can be easily damaged in transit. Quantities of 3-15 are shipped in bundles of three (3) in heavy-duty shipping tubes. Quantities greater than 15 are shipped in wooded crates.**

**Wood, Plastic and Breakaway arms cannot be used with the 1603 Barrier Gate / Auto-Spikes product.**

**WARNING! LTL Carriers are now charging additional fees for any shipment that is eight (8) feet in length or greater. These fees can be substantial.**

# 1603 Auto-Spikes / Operator Arm Selection

## Arms, Hardware Kits, Edges

### Octagonal Aluminum Arms

1601-555 14-Ft (4.27m)

1601-567 Arm 14 Ft (4.27 m), 2-Piece[1]

1601-812 Folding Arm Kit 12 Ft (3.66 m)[2]

*1. Ships in 8-ft (2.4m) long box.*

*2. Minimum ceiling height for this kit is 10 feet (3.04 m).*

### Round Aluminum Arms

1601-516 14-Ft (4.27m)

1601-524 Arm 14 Ft (4.27 m), 2-Piece[1]

1601-610 Arm 12 Ft (3.66 m) Folding[2]

*1. Ships in 8-ft (2.4m) long box.*

*2. Minimum ceiling height for this kit is 10 feet (3.04 m).*

### Octagonal Arm Hardware Kits - One (1) Required

1601-242 Hardware Kit[1]

8080-235 Reverse Edge Hardware Kit[2]

*1. Use this kit for arm only – no reverse edge.*

*2. Use this kit for arms with reverse edge (includes wiring harness).*

### Round Arm Hardware Kit – Required

1601-242 Arm Hardware Kit

### Octagonal Arm Edges[1] - Optional

8080-605 Reverse Edge 5 Ft.

8080-606 Reverse Edge 6 Ft.

8080-609 Reverse Edge 9 Ft.

8080-612 Reverse Edge 12 Ft.

8080-905 Reverse Edge 5 Ft Lighted

8080-906 Reverse Edge 6 Ft Lighted

8080-909 Reverse Edge 9 Ft Lighted

8080-912 Reverse Edge 12 Ft Lighted

8080-922 Folding Arm Reverse Edge Lighted[2]

8080-089 Bumper Edge 13 Ft (not a reverse edge)

*1. Edge must be at least 2-Ft shorter than the overall arm length.*

*2. Includes two (2) 5 Ft lighted reverse edges and wire harnesses.*

### Arm Conversion Kits Available

8080-532 Round Arm to Octagonal Arm

# Model 1610 Stand-Alone Traffic Control Spikes

## Automotive / Light Trucks Only

**Installation and use of spike components in areas that are subject to freezing weather with potential for snow and ice accumulation is not recommended. With advancements in tire construction, and with the many different types, sizes and styles of tires, we cannot guarantee that traffic control spikes will penetrate all tires. For use with automotive and light pickup trucks only.**

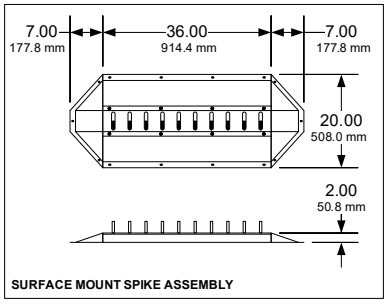


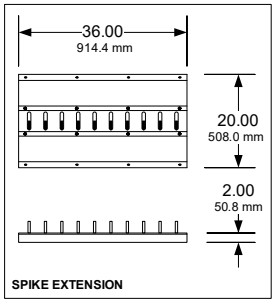


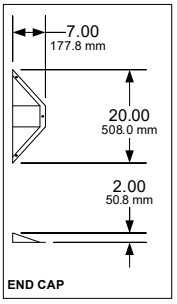


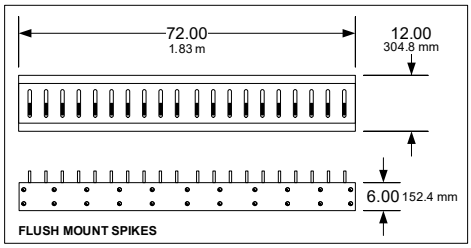


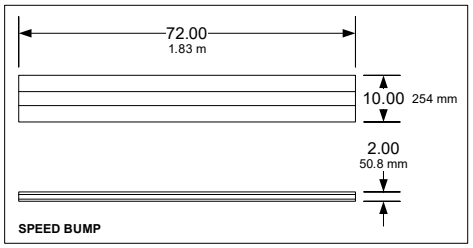


**8,000 Lb. per axle Weight Limit (5 MPH Maximum Speed)**

**Surface Mount**[1]

1610-088 Assembly Spring Retraction Yellow Finish[2]

1610-087 Extension Yellow Finish

1610-240 End Cap Yellow Finish

1610-098 Assembly Spring Retraction Red Finish[3]

1610-097 Extension Red Finish

1610-241 End Cap Red Finish

1610-010 Lock Down Tool

1. Surface mount spikes have a lock down feature (requires 1610-010).
2. 1610-088 assembly includes one (1) 1610-087 and two (2) 1610-240.
3. 1610-098 assembly includes one (1) 1610-097 and two (2) 1610-241.

**20,000 Lb. per axle Weight Limit (5 MPH Maximum Speed)**

**Flush Mount Heavy-Duty**

1610-090 Spring Retraction HD

1610-091 Weighted Retraction HD

**Flush Mount Heavy-Duty w/Lockdown Feature**

1610-092 Spring Retraction w/Lockdown HD[1]

1610-093 Weighted Retraction w/Lockdown HD[2]

1. Includes 1610-012 lock-down tool.
2. Includes 1610-013 lock-down tool

**8,000 Lb. per axle Weight Limit (5 MPH Maximum Speed)**

**Flush Mount**

1610-080 Spring Retraction

1610-081 Weighted Retraction

**Flush Mount w/Lock-Down Feature**

1610-082 Spring Retraction[1]

1610-083 Weighted Retraction[2]

1. Includes 1610-012 lock-down tool.
2. Includes 1610-013 lock-down tool

**Replacement Lock-Down Tools**

1610-012 Use with Spring Retraction spikes

1610-013 Use with Weighted Retraction spikes

**Speed Bump**

1610-150 Speed Bump

**Warning Sign – Required**[1]

1615-080 Warning Sign

1. Mandatory when spike systems are installed.

# Blank Page

# Traffic Control

## Warning Sign, Traffic Signal




**1615-080 Red Side**

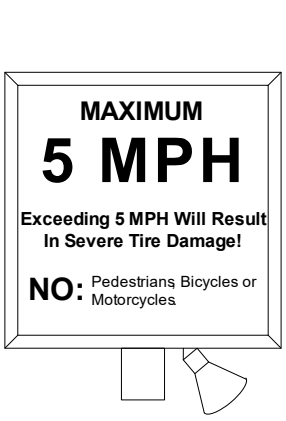


**1615-080 Green Side**

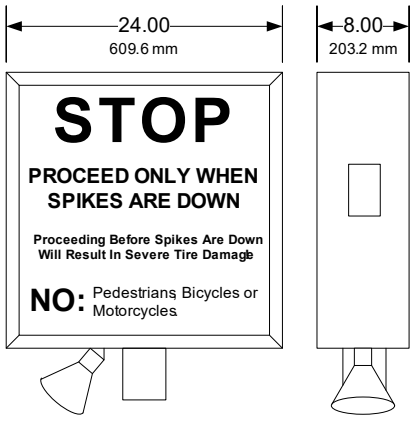


**1615-081 Red Both Sides**

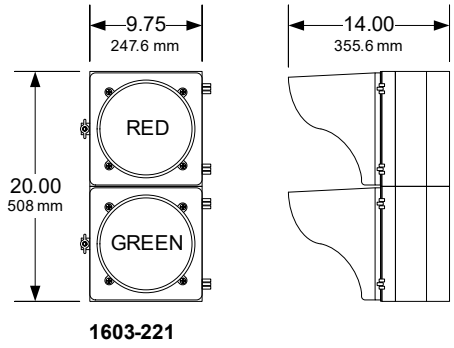


**1603-221**

**Illuminated Warning Signs**

1615-080

1615-082 (Spanish)

- Use these signs with surface and flush mount spike systems. Signs mount on a 3.5 in (89 mm) post.

**Illuminated Auto-Spike Warning Sign**

1615-081

- Use this sign with the 1603 auto-spike system. Sign mounts on a 3.5 in (89 mm) post.

**Replacement Components**

1615-022 LED T8 Tube, 12W, 700 Lumens

1615-023 LED Flood Lamp, 9W, 655 Lumens

1615-032 RED panel

1615-034 GREEN panel

1615-035 RED Auto-spike panel

**Traffic Signal 12 VDC**

1603-221

1603-222 includes 35” (.89m) Mount Post

1603-223 includes 95” (2.4m) Mount Post

**Replacement Components**

1603-551 LED Bulb 12VDC, 7W

# Overhead / Barrier Operator Parts & Replacement Items

## Miscellaneous Parts & Accessories

**Circuit Boards**

1601-010
Used in models 1601, 1602 and 1603

4405-018
Used in model 1175

1473-121 Convenience Open kit
Used in pre-2016 models 1150, 1601, 1602 and 1603

**Spike System Replacement Components**

1610-031
Replacement spring for 1610-080 spike set

1610-030
Replacement spike for 1610-080 spike set

1610-035
Replacement spike for 1610-083 spike set

1610-037
Spike spring lockdown assembly

1610-045
Spike, weighted assembly

**Barrier Operator Replacement Parts**

1601-281
Barrier arm hub cover – white

1601-283
Barrier arm hub cover - gray

2599-101
Replacement Warning Sign

1601-069
Wood arm mounting bracket

1601-068
Plastic arm mounting bracket

1601-360
Arm mounting hub kit - steel

1801-009
12 Volt, 3 AH replacement battery

**Warning Sign Replacement Components**

1615-032
Warning sign replacement panel – RED
(use with 1610-080 warning sign)

1615-034
Warning sign replacement panel – GREEN
(use with 1610-080 warning sign)

1615-035
Auto-spike warning sign replacement panel
(use with 1610-081 warning sign)

1615-038
Warning Sign panel – Entrapment Alert

1615-022
T8 LED Tube Lamp, 12 Watt, 700 Lumens
(warning sign replacement bulbs)

1615-023
LED Flood Lamp, 12VDC, 9 Watt

1603-551
LED Bulb 12VDC, 7 Watt
(traffic signal replacement bulb)

# 2160 DC Swing Gate Operator

## Brushless DC Gate Operator

**2160**

- Input 115/230 VAC
- Adjustable Magnetic Limits
- Three (3) Plug-in Loop Detector Ports
- Plug-in Radio Receiver
- Built-in power and reset switches
- Six (6) Programmable UL Inputs
- Five (5) Programmable Relays
- Built-in Diagnostics
- V-5, f1 UL Rated Enclosure
- Built-in Battery Backup
- Steel frame
- Opens gate 90° in approximately 12 - 14 sec.
- On-Board programming with Built-in LCD Display
- Overlap feature for bi-parting gates

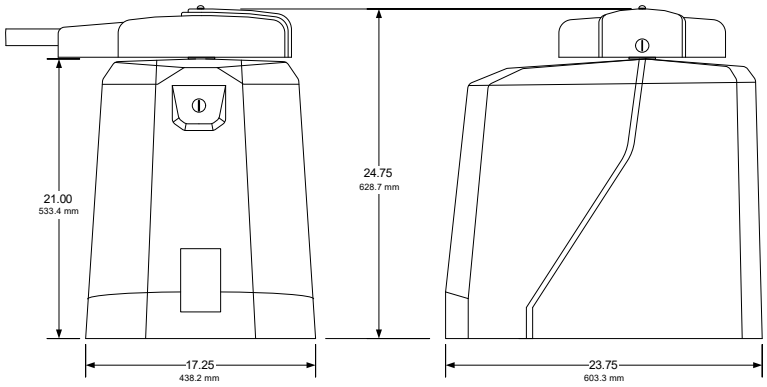


| Model | Maximum Gate Weight | Maximum Gate Length | Mount | Class of Operation[1] | Voltage | HP | Power Outlets | Maximum Cycles/Day[4] | Loop Ports[2] | Receiver Port[3] |
|---|---|---|---|---|---|---|---|---|---|---|
| 2160 | 1,200 Lbs<br>544 KG | 18 Ft<br>5.4 m | Pad | I, II, III, IV | 115/230 VAC | 1/2 | 2 | Continuous[4] | 3 | 1 |
| 2160 | 1,800 Lbs<br>816 KG | 22 Ft<br>6.7 m | Pad | I, II, III, IV | 115/230 VAC | 1 | 2 | Continuous[4] | 3 | 1 |

1. I = Residential; II = Commercial; III = Limited Access; IV = Restricted Access
2. Plug-in loop detector ports; open, center and reverse. DoorKing model 9412, 9413 plug-in loop detectors only.
3. DoorKing model 8045 receivers only.
4. Continuous operation is when AC power is present. Operation on battery backup (7.5 Ah batteries) is approximately 60 cycles (1/2 HP) and 40 cycles (1 HP). With optional 18 Ah batteries approximately 150 cycles (1/2 HP) and 100 cycles (1 HP). Cycles stated are just an estimate. Actual number of cycles will vary depending on usage, accessories connected, gate weight, operating condition of gate, temperature and charge state of the batteries.

# 2160 DC Swing Gate Operators

## Brushless DC Gate Operator

### Step 1: Choose an Operator

2160-380 1/2 HP 115/230 VAC

2160-381 1 HP 115/230 VAC

*Operators include two 7.5 Ah batteries for limited backup operation.*

### Entrapment Protection - Required

*Use Type B1 (non-contact) and/or Type B2 (contact) entrapment protection devices to protect all areas where the risk of entrapment exist - see pages 50 - 51.*

***Operator will not run without entrapment protection device(s) connected to the controller board. See installation manual for more information.***

### Battery / Solar Options

1801-004 12-Volt, 18 Ah Battery[1]

*1. Two required for 24 Volt operation.*

### Loops and Loop Detectors - Optional

2100-221 Single Channel Plug-in Detector

2100-222 Dual Channel Plug-in Detector

*See page 52 for a complete list of all loop detectors, prefabricated loops and loop accessories available.*

### Surge Suppression - Recommended

1879-080 High Voltage (120 VAC)

### Accessories

2100-210 Plug-in RF Receiver (MicroPlus / MicroClik)

6500-480 Heater Kit 120 VAC[1]

1601-197 Heater Kit 230 VAC[2]

*1. Heater turns on when temperature falls below 40°F (4.4°C). Use if operator is powered by 115 VAC source power.*

*2. Heater turns on when temperature falls below 40°F (4.4°C). Use if operator is powered by 230 VAC source power.*

### Backup Power Inverter - Optional

1000-083 1000-Watt, Pure Sine Wave

1000-045 Inverter Post Mount Kit

*See page 54 for more information.*

### Swing Gate Hardware Accessories

1200-009[1]
Flange Bearing Hinge 3000 Lb. (1360 kg) Weight Capacity

*1. Includes mounting bracket and hardware, two required per gate (top, bottom), designed for use with 2" (50.8 mm) gate frame.*

1200-019[2]
Sealed Bearing Hinge 2000 Lb. (907 kg) Weight Capacity

1200-039[2]
Sealed Bearing Hinge 3000 Lb. (1360 kg) Weight Capacity

*2. Includes mounting bracket and hardware, two required per gate (top, bottom), designed for use with round or square gate frames.*

1203-084[3]
Torsion Rod Counter-Balance Assembly

2600-299
Additional Torsion Rods

*3. Counter-balances uphill swing gates, includes top bracket, bottom bracket and one (1) torsion rod. Up to five (5) additional torsion rods can be added.*

6500-490[4]
Uphill Arm Pivot Assembly

*4. Use with 1203-084 Torsion Rod Assembly.*

# 6004, 6006, 6400 Operators

## Residential/Light Commercial

**Operators**

- 24 VDC continuous duty motor
- Built-in magnetic limit switches
- Slow-Start / Slow-Stop
- Small, compact designs

**Control Box**

- 115 VAC or 24 VDC / Solar input power
- Includes photocell
- Single and Dual (bi-parting) gate operation
- 18 Ah or 35 Ah battery options

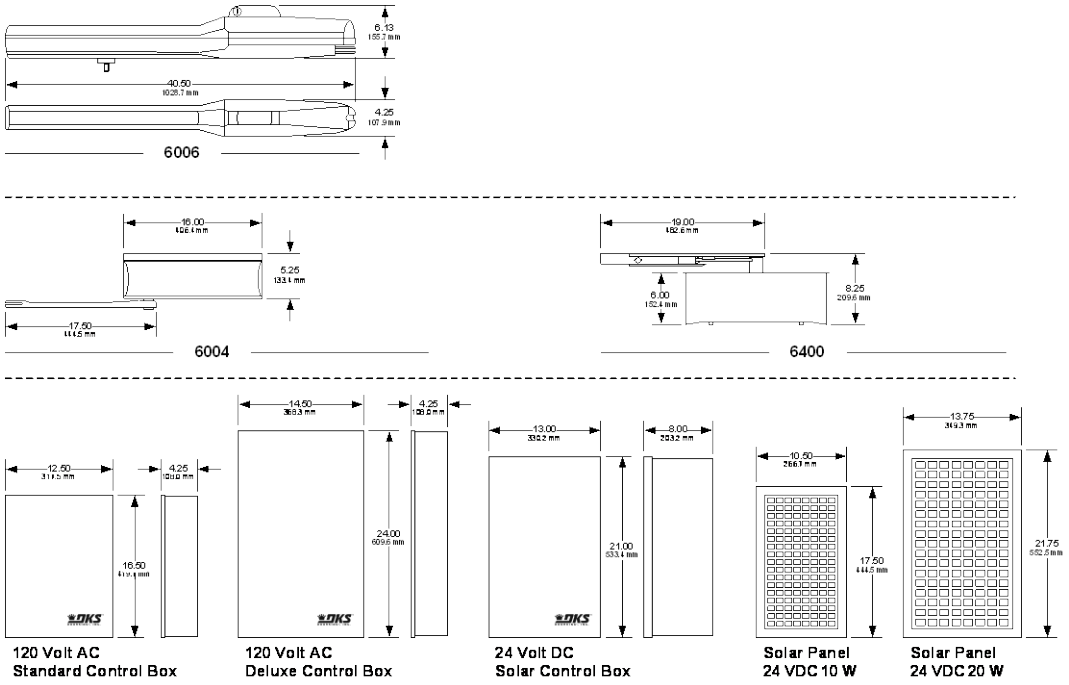


| Model | Max Gate Weight[1] | Max Gate Length[1] | Max Cycles per Day[2] | Maximum Cycles on Backup Power[2] | | |
|---|---|---|---|---|---|---|
| | | | | 3.5 Ah | 18 Ah | 35 Ah |
| 6006 | 600 lbs. (272 kg) | 18 ft. (5.48 m) | 300 | 100 | 600 | 1200 |
| | 800 lbs. (362 kg) | 16 ft. (4.87 m) | | | | |
| | 1600 lbs. (725 kg) | 8 ft. (2.43 m) | | | | |
| 6004 | 500 lbs. (227 kg) | 8 ft. (2.44 m) | 100 | 100 | 600 | 1200 |
| 6400[3] | 300 lbs. (136 kg) | 8 ft. (2.44 m) | 100 | 100 | 600 | 1200 |

1. Assumes gate to be in good condition and swinging in a level plane.
2. Cycles shown are estimates only for single operators when solar panel(s) are not providing a charge to the batteries. Actual number of cycles will vary depending on usage, accessories connected, gate weight, operating condition of gate, temperature, geographic location, weather (cloud coverage) and charge state of the batteries.
3. Not recommended for areas that are subject to freezing weather with ice and snow accumulation.

# 6006, 6004, 6400 Operators

## Residential / Light Commercial

### Actuators[1]

6006-380 Actuator Primary

6006-381 Actuator Secondary[2]

*1. 4302-xxx control box is required. Control box will operate a single or dual (Bi-parting gates) actuators.*

*2. Same as 6006-380, but also includes 50 Ft. of interconnecting cable.*

### Operators

6004-380 Column Mount Residential

6400-380 In-Ground Residential[3]

*3. Not recommended for areas that are subject to freezing weather with ice and snow accumulation.*

### Entrapment Protection - Required

*Use Type B1 (non-contact) and/or Type B2 (contact) entrapment protection devices to protect all areas where the risk of entrapment exist - see pages 50 - 51.*

***Actuator/Operator will not run without entrapment protection device(s) connected to the controller board. See installation manual for more information.***

***4302 Control Boxes include the 8080-057 photocell.***

### Loops and Loop Detectors - Optional

*See page 52 for a complete list of all loop detectors, prefabricated loops and loop accessories available.*

### Swing Gate Hardware Accessories

1200-009[1]
Flange Bearing Hinge 3000 Lb. (1360 kg) Weight Capacity

*1. Includes mounting bracket and hardware, two required per gate (top, bottom), designed for use with 2" (50.8 mm) gate frame.*

1200-019[2]
Sealed Bearing Hinge 2000 Lb. (907 kg) Weight Capacity

1200-039[2]
Sealed Bearing Hinge 3000 Lb. (1360 kg) Weight Capacity

*2. Includes mounting bracket and hardware, two required per gate (top, bottom), designed for use with round or square gate frames.*

1203-084[3]
Torsion Rod Counter-Balance Assembly

2600-299
Additional Torsion Rods

*3. Counter-balances uphill swing gates, includes top bracket, bottom bracket and one (1) torsion rod. Up to five (5) additional torsion rods can be added.*

### 115 VAC Control Box

4302-311 Standard

4302-312 Deluxe

*115 VAC control boxes include two (2) 3.5 Ah batteries, 8080-057 photocell, 8040-080 receiver and two (2) single button transmitters.*

*Deluxe control box includes three (3) 115 VAC convenient outlets.*

### Solar Control Box

4302-313 (No batteries)

4302-314 (Two 18 Ah batteries)

4302-315 (Two 35 Ah batteries)

*Solar control boxes include 8080-057 photocell, 8040-080 receiver and two (2) single button transmitters.*

### Solar Panels

2000-076 24-Volt, 20-Watt
*Use with 35 Ah batteries*

2000-077 24-Volt, 10-Watt
*Use with 18 Ah batteries*

2000-110 Solar Panel Mount Bracket

### Batteries

1801-009 12-volt, 3.5 Ah

1801-004 12-volt, 18 Ah

1801-005 12-volt, 35 Ah

### Surge Suppression - Recommended

1879-080 High Voltage (120 VAC)

### Bi-Parting (Dual) Gate Connection Cable

2600-755 30-Ft. (9.1 m)

2600-756 40-Ft. (12.2 m)

2600-757 50-Ft. (15.2 m)

2600-754 500-Ft. (152.4 m)

# 6050 / 6100 Swing Gate Operators

## Automatic Magnetic Limits

**6050 / 6100**

- Self-Adjusting Magnetic Limits
- Type A inherent reverse system
- Plug-in Loop Detector Ports
- Gate Tracker Data Output
- Built-in power and reset switches
- Tamper protect feature
- Polypropylene cover
- Galvanized steel frame
- Pad or Post mounted
- Opens gate 90° in approximately 12 sec.
- Magnetic lock output
- Overlap feature for bi-parting gates

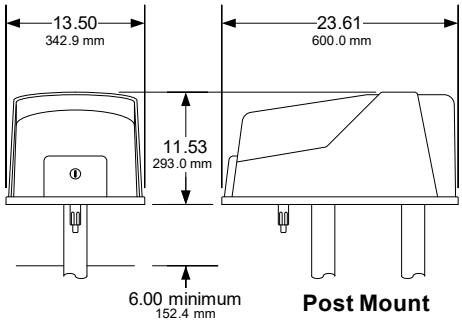


**Post Mount**

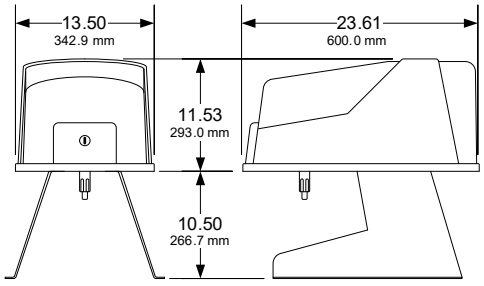


**Pad Mount**

| Model | Maximum Gate Weight | Maximum Gate Length | Mount Options[1] | Class of Operation[2] | Voltage | HP | Power Outlets | Maximum Cycles / Day | Loop Ports[4] | Adjustable Clutch[5] |
|---|---|---|---|---|---|---|---|---|---|---|
| 6050 | 400 Lbs<br>181 KG | 10 Ft<br>3.05 m | Pad / Post | I | 115 VAC | 1/2[3] | N/A | 100 | 2 | Yes |
| 6100 | 500 Lbs<br>226 KG | 14 Ft<br>4.26 m | Pad / Post | I, II | 115 VAC | 1/2 | N/A | Continuous | 2 | Yes |

1. Select pad or post mount hardware kit when ordering.
2. I = Residential; II = Commercial.
3. This is an intermittent duty cycle motor.
4. Plug-in loop detector ports; open and reverse. DoorKing plug-in loop detectors only.
5. Clutch is not applicable as an entrapment protection device.

# 6050 / 6100 Swing Gate Operators

## Automatic Magnetic Limits

### Step 1: Choose an Operator or Operator Set

6050-380 Primary

6050-381 Secondary

*Secondary operator includes 30 feet (9.1 m) of interconnection cable.*

6100-380 Primary

6100-381 Secondary

*Secondary operator includes 40 feet (12.2 m) of interconnection cable.*

### Step 2: Choose a Mounting Kit (Includes Arms)

2600-671 Pad Mount Kit

2600-674 Post Mount Kit

### Entrapment Protection - Required

*Use Type B1 (non-contact) and/or Type B2 (contact) entrapment protection devices to protect all areas where the risk of entrapment exist - see pages 50 - 51.*

***Operator will not run without entrapment protection device(s) connected to the controller board. See installation manual for more information.***

### Loops and Loop Detectors - Optional

*See page 52 for a complete list of all loop detectors, prefabricated loops and loop accessories available.*

### Surge Suppression - Recommended

1879-080 High Voltage (120 VAC)

### Accessories

8060-082 RF Kit (Receiver + MicroPlus TX (1)

2600-664 Post Mount Base Plate[1]

1601-154 Heater Kit 120 VAC[2]

*1. Use to mount 6050 and 6100 operators onto an existing concrete pad.*

*2. Heater turns on when temperature falls below 40°F (4.4°C).*

### Backup Power Inverter - Optional

1000-083 1000-Watt, Pure Sine Wave

1000-045 Inverter Post Mount Kit

*See page 54 for more information.*

### Bi-Parting (Dual) Gate Interconnection Cable

2600-755 30-Ft. (9.1 m)

2600-756 40-Ft. (12.2 m)

2600-757 50-Ft. (15.2 m)

2600-754 500-Ft. (152.4 m)

### Swing Gate Hardware Accessories

1200-009[1]
Flange Bearing Hinge 3000 Lb. (1360 kg) Weight Capacity

*1. Includes mounting bracket and hardware, two required per gate (top, bottom), designed for use with 2" (50.8 mm) gate frame.*

1200-019[2]
Sealed Bearing Hinge 2000 Lb. (907 kg) Weight Capacity

1200-039[2]
Sealed Bearing Hinge 3000 Lb. (1360 kg) Weight Capacity

*2. Includes mounting bracket and hardware, two required per gate (top, bottom), designed for use with round or square gate frames.*

1203-084[3]
Torsion Rod Counter-Balance Assembly

2600-299
Additional Torsion Rods

*3. Counter-balances uphill swing gates, includes top bracket, bottom bracket and one (1) torsion rod. Up to five (5) additional torsion rods can be added.*

6500-490[4]
Uphill Arm Pivot Assembly

*4. Use with 1203-084 Torsion Rod Assembly.*

# 6300 Swing Gate Operators

## Automatic Magnetic Limits

**6300**

- Self-Adjusting Magnetic Limits
- Type A inherent reverse system
- Plug-in Loop Detector Ports
- Gate Tracker Data Output
- Built-in power and reset switches
- Tamper protect feature
- Polypropylene cover
- Galvanized steel frame
- Pad or Post mounted
- Opens gate 90° in approximately 16 sec.
- Magnetic lock output
- Overlap feature for bi-parting gates

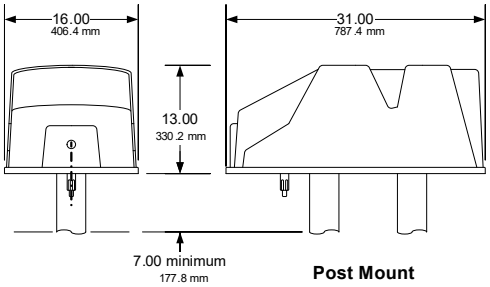


**Post Mount**

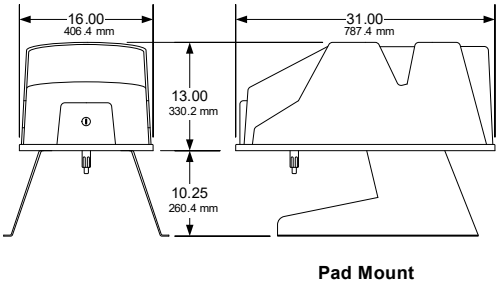


**Pad Mount**

| Model | Maximum Gate Weight | Maximum Gate Length | Mount Options[1] | Class of Operation[2] | Voltage[3] | HP | Power Outlets | Maximum Cycles / Day | Loop Ports[4] | Adjustable Clutch[5] |
|---|---|---|---|---|---|---|---|---|---|---|
| 6300 | 700 Lbs<br>317 KG | 18 Ft<br>5.48 m | Pad / Post | I, II, III, IV | 115 208<br>230 460<br>575 VAC | 1/2 | 2 | Continuous | 2 | Yes |
| 6300 | 800 Lbs<br>362 KG | 22 Ft<br>6.70 m | Pad / Post | I, II, III, IV | 115 208<br>230 460<br>575 VAC | 1 | 2 | Continuous | 2 | Yes |

1. Select pad or post mount hardware kit when ordering.
2. I = Residential; II = Commercial; III = Limited Access; IV = Restricted Access
3. High voltage kit (P/N 2600-266) required for 208 Volt and higher.
4. Plug-in loop detector ports; open and reverse. DoorKing plug-in loop detectors only.
5. Clutch is not applicable as an entrapment protection device.

# 6300 Swing Gate Operators

## Automatic Magnetic Limits

### Step 1: Choose an Operator or Operator Set

6300-380 Primary ½ HP

6300-381 Secondary ½ HP

6300-384 Primary 1 HP

6300-385 Secondary 1 HP

*Secondary operators includes 50 feet (15.2 m) of interconnection cable.*

### High Voltage Kit - Optional

2600-266

*Allows the operator to be powered from 208, 230, 460 or 575 VAC source voltage. In dual gate applications, only one (1) kit is required.*

### Step 2: Choose a Mounting Kit (Includes Arms)

2600-264 Pad Mount Kit

2600-263 Post Mount Kit

### Entrapment Protection - Required

*Use Type B1 (non-contact) and/or Type B2 (contact) entrapment protection devices to protect all areas where the risk of entrapment exist - see pages 50 - 51.*

***Operator will not run without entrapment protection device(s) connected to the controller board. See installation manual for more information.***

### Loops and Loop Detectors - Optional

*See page 52 for a complete list of all loop detectors, prefabricated loops and loop accessories available.*

### Surge Suppression - Recommended

1879-080 High Voltage (120 VAC)

### Accessories

8060-082 RF Kit (Receiver + MicroPlus TX (1)

1601-154 Heater Kit 120 VAC[1]

1601-197 Heater Kit 208 / 230 VAC[1]

1601-198 Heater Kit 460 VAC[1]

*1. Heater turns on when temperature falls below 40°F (4.4°C).*

### Backup Power Inverter - Optional

1000-083 1000-Watt, Pure Sine Wave

1000-045 Inverter Post Mount Kit

*See page 54 for more information.*

### Bi-Parting (Dual) Gate Interconnection Cable

2600-755 30-Ft. (9.1 m)

2600-756 40-Ft. (12.2 m)

2600-757 50-Ft. (15.2 m)

2600-754 500-Ft. (152.4 m)

### Swing Gate Hardware Accessories

1200-009[1]
Flange Bearing Hinge 3000 Lb. (1360 kg) Weight Capacity

*1. Includes mounting bracket and hardware, two required per gate (top, bottom), designed for use with 2" (50.8 mm) gate frame.*

1200-019[2]
Sealed Bearing Hinge 2000 Lb. (907 kg) Weight Capacity

1200-039[2]
Sealed Bearing Hinge 3000 Lb. (1360 kg) Weight Capacity

*2. Includes mounting bracket and hardware, two required per gate (top, bottom), designed for use with round or square gate frames.*

1203-084[3]
Torsion Rod Counter-Balance Assembly

2600-299
Additional Torsion Rods

*3. Counter-balances uphill swing gates, includes top bracket, bottom bracket and one (1) torsion rod. Up to five (5) additional torsion rods can be added.*

6500-490[4]
Uphill Arm Pivot Assembly

*4. Use with 1203-084 Torsion Rod Assembly.*

# 6500 Swing Gate Operators

## Adjustable Limit Swing Gate Operators

**6500**

- Adjustable Magnetic Limits
- Type A inherent reverse system
- Plug-in Loop Detector Ports
- Gate Tracker Data Output
- Built-in power and reset switches
- Polypropylene cover
- Galvanized steel frame
- Opens gate 90° in approximately 16 sec.
- Magnetic lock output
- Overlap feature for bi-parting gates

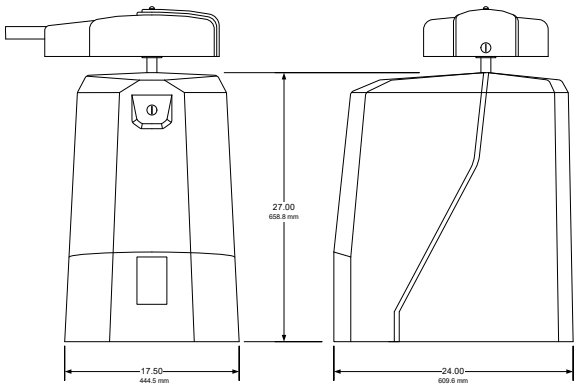


| Model | Maximum Gate Weight | Maximum Gate Length | Mount | Class of Operation[1] | Voltage[2] | HP | Power Outlets | Maximum Cycles / Day | Loop Ports[3] | Adjustable Clutch |
|---|---|---|---|---|---|---|---|---|---|---|
| 6500 | 700 Lbs<br>317 KG | 18 Ft<br>5.48 m | Pad | I, II, III, IV | 115 208<br>230 460<br>575 VAC | 1/2 | 2 | Continuous | 2 | No |
| 6500 | 800 Lbs<br>362 KG | 22 Ft<br>6.70 m | Pad | I, II, III, IV | 115 208<br>230 460<br>575 VAC | 1 | 2 | Continuous | 2 | No |

1. I = Residential; II = Commercial; III = Limited Access; IV = Restricted Access
2. High voltage kit (P/N 2600-266) required for 208 Volt and higher.
3. Plug-in loop detector ports; open and reverse. DoorKing plug-in loop detectors only.

# 6500 Swing Gate Operators

## Adjustable Limit Swing Gate Operators

### Step 1: Choose an Operator or Operator Set

6500-380 Primary ½ HP

6500-381 Secondary ½ HP

*Secondary operator includes 50 feet (15.2 m) of interconnection cable.*

6500-384 Primary 1 HP

6500-385 Secondary 1 HP

*Secondary operator includes 50 feet (15.2 m) of interconnection cable.*

### High Voltage Kit - Optional

2600-266

*Allows the operator to be powered from 208, 230, 460 or 575 VAC source voltage. In dual gate applications, only one (1) kit is required.*

### Entrapment Protection - Required

*Use Type B1 (non-contact) and/or Type B2 (contact) entrapment protection devices to protect all areas where the risk of entrapment exist - see pages 50 -51.*

***Operator will not run without entrapment protection device(s) connected to the controller board. See installation manual for more information.***

### Loops and Loop Detectors - Optional

*See page 52 for a complete list of all loop detectors, prefabricated loops and loop accessories available.*

### Surge Suppression - Recommended

1879-080 High Voltage (120 VAC)

### Accessories

8060-082 RF Kit (Receiver + MicroPlus TX (1)

6500-480 Heater Kit 120 VAC[1]

*1. Heater turns on when temperature falls below 40°F (4.4°C). This heater kit cannot be used if the operator is powered from the 2600-266 high voltage kit.*

### Backup Power Inverter - Optional

1000-083 1000-Watt, Pure Sine Wave

1000-045 Inverter Post Mount Kit

*See page 54 for more information.*

### Bi-Parting (Dual) Gate Interconnection Cable

2600-755 30-Ft. (9.1 m)

2600-756 40-Ft. (12.2 m)

2600-757 50-Ft. (15.2 m)

2600-754 500-Ft. (152.4 m)

### Swing Gate Hardware Accessories

1200-009[1]
Flange Bearing Hinge 3000 Lb. (1360 kg) Weight Capacity

*1. Includes mounting bracket and hardware, two required per gate (top, bottom), designed for use with 2" (50.8 mm) gate frame.*

1200-019[2]
Sealed Bearing Hinge 2000 Lb. (907 kg) Weight Capacity

1200-039[2]
Sealed Bearing Hinge 3000 Lb. (1360 kg) Weight Capacity

*2. Includes mounting bracket and hardware, two required per gate (top, bottom), designed for use with round or square gate frames.*

1203-084[3]
Torsion Rod Counter-Balance Assembly

2600-299
Additional Torsion Rods

*3. Counter-balances uphill swing gates, includes top bracket, bottom bracket and one (1) torsion rod. Up to five (5) additional torsion rods can be added.*

6500-490[4]
Uphill Arm Pivot Assembly

*4. Use with 1203-084 Torsion Rod Assembly.*

# 6524 DC Swing Gate Operator

## Adjustable Limit Swing Gate Operator

**6524**

- Input 115/230 VAC or 24 VDC (Solar)
- Adjustable Magnetic Limits
- Plug-in Loop Detector Ports
- Gate Tracker Data Output
- Built-in power and reset switches
- Polypropylene cover
- Built-in Battery Backup
- Galvanized steel frame
- Opens gate 90° in approximately 16 sec.
- Magnetic lock output
- Overlap feature for bi-parting gates

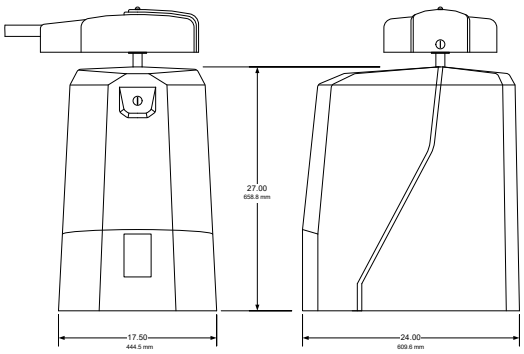


| Model | Maximum Gate Weight | Maximum Gate Length | Mount | Class of Operation[1] | Voltage | HP | Power Outlets | Maximum Cycles / Day | Loop Ports[2] | Adjustable Clutch |
|---|---|---|---|---|---|---|---|---|---|---|
| 6524 | 800 Lbs 362 KG | 16 Ft 4.88 m | Pad | I, II, III, IV | 115/230 VAC | 1/2 | 2 | Continuous[3] | 2 | No |
| 6524[5] | 800 Lbs 362 KG | 16 Ft 4.88 m | Pad | I, II, III, IV | 24 VDC (Solar) | 1/2 | 0 | Up to 150[4] | 2 | No |

1. I = Residential; II = Commercial; III = Limited Access; IV = Restricted Access
2. Plug-in loop detector ports; open and reverse. DoorKing plug-in loop detectors only.
3. Continuous operation is when AC power is present. Operation on battery backup (7.5 Ah batteries) is limited to approximately 40 cycles.
4. Up to 150 cycles with 18 Ah batteries. Actual number of cycles will vary depending on usage, accessories connected, gate weight, operating condition of gate, temperature and charge state of the batteries. Charge state of batteries is affected by geographical location of the product when using solar to recharge the batteries.
5. Solar powered operators will not support bi-parting (dual) gate operation.

# 6524 DC Swing Gate Operators

## Adjustable Limit Swing Gate Operator

### Step 1: Choose an Operator

6524-380 115/230 VAC

*Includes two 7.5 Ah batteries for limited backup operation.*

*Includes 50 feet (15 m) of RS 485 interconnection cable for bi-parting (dual) gate operation.*

6524-381 24 VDC (Solar)

*24 VDC solar input power only (supply your own batteries and solar charging system or use DKS solar kit).*

*Solar powered operators will not support bi-parting (dual) gate operation.*

### Entrapment Protection - Required

*Use Type B1 (non-contact) and/or Type B2 (contact) entrapment protection devices to protect all areas where the risk of entrapment exist - see pages 50 - 51.*

***Operator will not run without entrapment protection device(s) connected to the controller board. See installation manual for more information.***

### Battery / Solar Options

1801-004 12-Volt, 18 Ah Battery[1]

2000-077 24-Volt, 10-Watt Solar Panel

2000-070 Solar Kit[2]

*1. Two required for 24 Volt operation.*

*2. Kit includes two (2) 18 Ah batteries, 10 Watt solar panel and bracket.*

### Loops and Loop Detectors - Optional

*See page 52 for a complete list of all loop detectors, prefabricated loops and loop accessories available.*

### Surge Suppression - Recommended

1879-080 High Voltage (120 VAC)

### Accessories

8060-082 RF Kit (Receiver + MicroPlus TX (1)

6500-480 Heater Kit 120 VAC[1]

*1. Heater turns on when temperature falls below 40°F (4.4°C). This heater kit cannot be used if the operator is powered from the 2600-266 high voltage kit.*

### Backup Power Inverter - Optional

1000-083 1000-Watt, Pure Sine Wave

1000-045 Inverter Post Mount Kit

*See page 54 for more information.*

### Bi-Parting (Dual) Gate Interconnection Cable RS 485

9024-136 50-Ft. (15 m)

### Swing Gate Hardware Accessories

1200-009[1]
Flange Bearing Hinge 3000 Lb. (1360 kg) Weight Capacity

*1. Includes mounting bracket and hardware, two required per gate (top, bottom), designed for use with 2" (50.8 mm) gate frame.*

1200-019[2]
Sealed Bearing Hinge 2000 Lb. (907 kg) Weight Capacity

1200-039[2]
Sealed Bearing Hinge 3000 Lb. (1360 kg) Weight Capacity

*2. Includes mounting bracket and hardware, two required per gate (top, bottom), designed for use with round or square gate frames.*

1203-084[3]
Torsion Rod Counter-Balance Assembly

2600-299
Additional Torsion Rods

*3. Counter-balances uphill swing gates, includes top bracket, bottom bracket and one (1) torsion rod. Up to five (5) additional torsion rods can be added.*

6500-490[4]
Uphill Arm Pivot Assembly

*4. Use with 1203-084 Torsion Rod Assembly.*

# Swing Gate Accessories

## Hinges, Torsion Rod Counterbalance

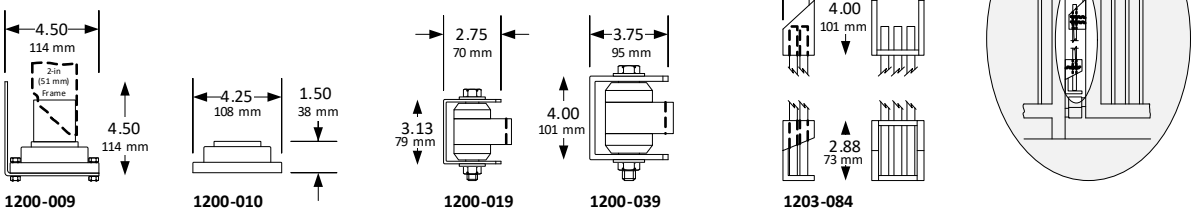


**Flange Bearing Hinge**

1200-009 3000 Lb. (1360 Kg) weight capacity

1200-010 Replacement bearing

- Designed for use with 2-inch (51 mm) gate frame.
- Includes mounting bracket and hardware.
- Zert grease fitting.
- Two required (top, bottom) per gate.

**Sealed Bearing Hinge**

1200-019 2000 Lb. (907 Kg) weight capacity

1200-039 3000 Lb. (1360 Kg) weight capacity

- Designed for use with round or square gate frame.
- Includes mounting bracket and hardware.
- Two required (top, bottom) per gate.

**Torsion Rod Counterbalance Assembly**

1203-084[1] Torsion Rod Assembly

2600-299[2] Torsion Rods

1. Includes one (1) 2600-299 torsion rod.
2. Up to five (5) additional rods can be added to the 1203-084 assembly.

# Swing Gate Operator Parts & Accessories

## Miscellaneous Parts & Accessories

### Plug-in RF Receiver

8045-010

Plug-in RF Receiver compatible with MicroPlus and MicroClik transmitters. Use only with 2100 Series operators.

### Smart Gate Controller

1800-500

Allows control of the gate operator from your smartphone. Requires a WiFi connection and the Smart Connect App (available from the App Store and Google Play). Compatible with Alexa, Google Home and Siri. Maximum 20 users.

### Circuit Boards / Controllers

2100-100 Controller
Use with 2100 Series operators only

4100-018
Used in model 6524

4302-018
Used in models 6006, 6004 and 6400

4405-018
Used in model 6500, 6550

4502-018
Used in models 6050, 6100 and 6300

### Base Plate, Mounting Pipes, Pivot Arm

2600-664 Concrete Base Plate
Use to mount the 6050 or 6100 post mount operators onto an existing concrete pad

6500-490 Uphill Arm Pivot Assembly
Use with 6050, 6100, 6300 and 6500 operators when the gate opens on an uphill or downhill slope. Should be used with 1203-084 Torsion Rod Assembly.

6550-490 Uphill Arm Pivot Assembly
Use with 6550 operator when the gate opens on an uphill or downhill slope. Should be used with 1203-084 Torsion Rod Assembly.

### Bi-Parting Connection Cable

2600-754 Primary / Secondary Cable

500-ft (152.4 m) roll

### Batteries

1801-009 Battery
12 Volt, 3.5 Amp Hour

1801-004 Battery
12 Volt, 18 Amp Hour

1801-005 Battery
12 Volt, 35 Amp Hour

# 2170 DC Slide Gate Operator

## Brushless DC Gate Operator

**2170**

- Input 115/230 VAC
- Adjustable Limits
- Three (3) Plug-in Loop Detector Ports
- Plug-in Radio Receiver
- Gate Speed 12-Inches per Second (Maximum)
- Built-In Diagnostics
- Built-in power and reset switches
- Six (6) Programmable UL Inputs
- Five (5) Programmable Relays
- On-Board programming with Built-In LCD Display
- V-5, f1 UL Rated Enclosure
- 30:1 Gear Reducer Drive Train
- Built-in Battery Backup
- Steel frame

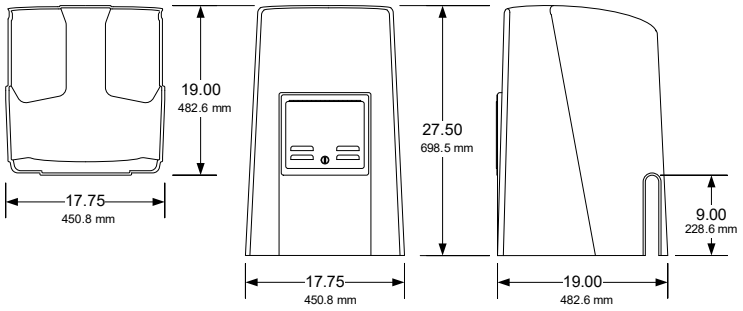


| Model | Maximum Gate Weight | Maximum Gate Length | Mount | Class of Operation[1] | Voltage | HP | Power Outlets | Maximum Cycles / Day | Loop Ports[2] | Release[3] |
|---|---|---|---|---|---|---|---|---|---|---|
| 2170-380 | 2,300 Lbs 1,043 KG | 40 Ft 12.2 m | Pad or Post[5] | I, II, III, IV | 115/230 VAC | 1/2 | 2 | Continuous[4] | 3 | Built-in Gearbox |
| 2170-381 | 3,500 Lbs 1,587 KG | 40 Ft 12.2 m | Pad or Post[5] | I, II, III, IV | 115/230 VAC | 1 | 2 | Continuous[4] | 3 | Built-in Gearbox |
| 2170-382 | 2,300 Lbs 1,043 KG | 40 Ft 12.2 m | Pad or Post[5] | I, II, III, IV | 115/230 VAC | 1/2 | 2 | Continuous[4] | 3 | Chain Drop |
| 2170-383 | 3,500 Lbs 1,587 KG | 40 Ft 12.2 m | Pad or Post[5] | I, II, III, IV | 115/230 VAC | 1 | 2 | Continuous[4] | 3 | Chain Drop |

1. I = Residential; II = Commercial; III = Limited Access; IV = Restricted Access
2. Plug-in loop detector ports; open, center and reverse. DoorKing model 9412, 9413 plug-in loop detectors only.
3. Gearbox release disconnects the gearbox from the drive train. Chain-drop requires the chain to be disconnected.
4. Continuous operation is when AC power is present. Operation on battery backup (7.5 Ah batteries) is approximately 60 cycles (1/2 HP) and 40 cycles (1 HP). With optional 18 Ah batteries approximately 150 cycles (1/2 HP) and 100 cycles (1 HP). Cycles stated are just an estimate. Actual number of cycles will vary depending on usage, accessories connected, gate weight, gate length, operating condition of gate, temperature and charge state of the batteries.
5. Requires post mount kit.

# 2170 DC Slide Gate Operator

## Brushless DC Gate Operator

### Choose an Operator

2170-380 ½ HP 115/230 VAC w/Gearbox Release

2170-381 1 HP 115/230 VAC w/Gearbox Release

2170-382 ½ HP 115/230 VAC

2170-383 1 HP 115/230 VAC

*Includes two 7.5 Ah batteries for limited backup operation.*

### Entrapment Protection - Required

*Use Type B1 (non-contact) and/or Type B2 (contact) entrapment protection devices to protect all areas where the risk of entrapment exist - see pages 50 - 51.*

***Operator will not run without entrapment protection devices connected to the controller board. Minimum of two (one in each direction of travel) is required. See installation manual for more information.***

### Battery / Solar Options

1801-004 12-Volt, 18 Ah Battery[1]

*1. Two required for 24 Volt operation.*

### Loops and Loop Detectors - Optional

2100-211 Single Channel Plug-in Detector

2100-222 Dual Channel Plug-in Detector

*See page 52 for a complete list of all loop detectors, prefabricated loops and loop accessories available.*

### Surge Suppression - Recommended

1879-080 High Voltage (120 VAC)

### Accessories

2100-210 Plug-in RF Kit Receiver (MicroPlus / MicroClik)

9000-015 Post Mount Kit[1]

9000-014 Post Mount Base Plate

2600-961 Chain Link Fence Gate Bracket

1601-154 Heater Kit 120 VAC[2]

1601-197 Heater Kit 208/230 VAC[2]

*1. Includes base plate, mounting posts and hardware.*

*2. Heater turns on when temperature falls below 40°F (4.4°C).*

### Backup Power Inverter - Optional

1000-083 1000-Watt, Pure Sine Wave

1000-045 Inverter Post Mount Kit

*See page 54 for more information.*

### Guarded Guide Rollers & Bracket Assembly

1204-120 Single 3-in (76.2 mm)

1204-122 Dual 3-in (76.2 mm)

1204-121 Single 6-in (152.4 mm)

1204-123 Dual 6-in (152.4 mm)

1204-005 Replacement Roller 3-in (76.2 mm)

*See page 47 for more information.*

### V-Wheels - Max Gate Weight

1201-102 UHMW 4-in (101.6 mm) 500 lb. (227 kg)

1201-105 UHMW 4-in (101.6 mm) 750 lb. (340 kg)

1201-117 Steel 4-in (101.6 mm) 1500 lb. (680 kg)

*See page 46 for more information.*

### V-Wheels Tandem – Max Gate Weight

1201-012 UHMW 4-in (101.6 mm) 1500 lb. (680 kg)

1201-010 Steel 4-in (101.6 mm) 3000 lb. (1360 kg)

1201-210 Steel 6-in (152.4 mm) 5000 lb. (2268 kg)

*See page 46 for more information.*

### Chain

2600-442 #40 Chain, Nickel Plated, 20-Ft (6 m)

2600-818 Chain Idler Assembly[1]

*1. Use with rear-mounted operators.*

### End Catch

1204-004

*Designed for gates with 2-inch (50.8 mm) frame.*

# 9000 Slide Gate Operators

## Adjustable Limit Slide Gate Operator

**9000**

- Adjustable Limits
- Plug-in Loop Detector Ports
- Built-in power and reset switches
- Two 115 VAC convenience outlets
- Selectable stop/ reverse function
- 30:1 Gear Reducer Drive Train
- Steel frame
- Polypropylene cover
- 20-Feet (6 m) #40 Nickel Plated Chain
- Gate tracker data output

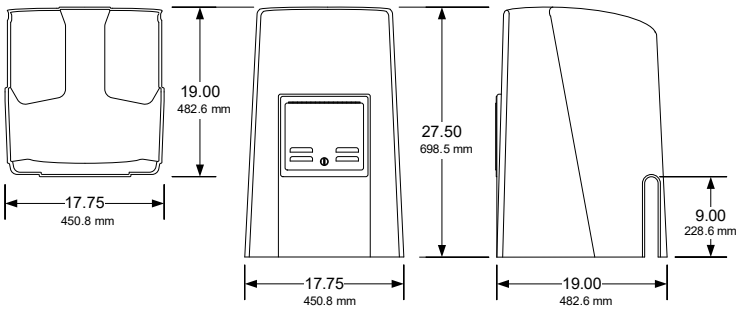


| Model | Maximum Gate Weight | Maximum Gate Length | Mount | Class of Operation[1] | Voltage[2] | HP | Power Outlets | Maximum Cycles / Day | Loop Ports[3] | Adjustable Clutch |
|---|---|---|---|---|---|---|---|---|---|---|
| 9000 | 1000 Lbs 453 KG | 35 Ft 10.7 m | Pad or Post[4] | I, II | 115 208 230 460 575 VAC | 1/2 | 2 | Continuous | 2 | No |
| 9000 | 1500 Lbs 680 KG | 35 Ft 10.7 m | Pad or Post[3] | I, II, III, IV | 115 208 230 460 575 VAC | 1 | 2 | Continuous | 2 | No |

1. I = Residential; II = Commercial; III = Limited Access; IV = Restricted Access.
2. High voltage kit (P/N 2600-266) required for 208 Volt and higher.
3. Plug-in loop detector ports; open and reverse. DoorKing plug-in loop detectors only.
3. Requires post mounting kit.

# 9000 Slide Gate Operators

## Adjustable Limit Slide Gate Operator

### Choose an Operator

9000-380 ½ HP Primary 115 VAC

9000-381 ½ HP Secondary 115 VAC

9000-385 1 HP Primary 115 VAC

9000-386 1 HP Secondary 115 VAC

### High Voltage Kit - Optional

2600-266 High Voltage Kit

*Allows the operator to be powered from 208, 230, 460 or 575 VAC source voltage.*

### Entrapment Protection - Required

*Use Type B1 (non-contact) and/or Type B2 (contact) entrapment protection devices to protect all areas where the risk of entrapment exist - see pages 50 - 51.*

***Operator will not run without entrapment protection devices connected to the controller board. Minimum of two (one in each direction of travel) is required. See installation manual for more information.***

### Loops and Loop Detectors - Optional

*See page 52 for a complete list of all loop detectors, prefabricated loops and loop accessories available.*

### Surge Suppression - Recommended

1879-080 High Voltage (120 VAC)

### Accessories

8060-082 RF Kit (Receiver + MicroPlus TX (1)

9000-015 Post Mount Kit[1]

9000-014 Post Mount Base Plate

2600-961 Chain Link Fence Gate Bracket

1601-154 Heater Kit 120 VAC[2]

1601-197 Heater Kit 208/230 VAC[2]

1601-198 Heater Kit 480 VAC[2]

*1. Includes base plate, mounting posts and hardware.*

*2. Heater turns on when temperature falls below 40°F (4.4°C).*

### Chain

2600-442 #40 Chain, Nickel Plated, 20-Ft (6 m)

2600-818 Chain Idler Assembly[1]

*1. Use with rear-mounted operators.*

### Backup Power Inverter - Optional

1000-083 1000-Watt, Pure Sine Wave

1000-045 Inverter Post Mount Kit

*See page 54 for more information.*

### Bi-Parting (Dual) Gate Interconnection Cable

2600-755 30-Ft. (9.1 m)

2600-756 40-Ft. (12.2 m)

2600-757 50-Ft. (15.2 m)

2600-754 500-Ft. (152.4 m)

### Guarded Guide Rollers & Bracket Assembly

1204-120 Single 3-in (76.2 mm)

1204-122 Dual 3-in (76.2 mm)

1204-121 Single 6-in (152.4 mm)

1204-123 Dual 6-in (152.4 mm)

1204-005 Replacement Roller 3-in (76.2 mm)

*See page 47 for more information.*

### V-Wheels - Max Gate Weight

1201-102 UHMW 4-in (101.6 mm) 500 lb. (227 kg)

1201-105 UHMW 4-in (101.6 mm) 750 lb. (340 kg)

1201-117 Steel 4-in (101.6 mm) 1500 lb. (680 kg)

*See page 46 for more information.*

### V-Wheels Tandem – Max Gate Weight

1201-012 UHMW 4-in (101.6 mm) 1500 lb. (680 kg)

1201-010 Steel 4-in (101.6 mm) 3000 lb. (1360 kg)

1201-210 Steel 6-in (152.4 mm) 5000 lb. (2268 kg)

*See page 46 for more information.*

### End Catch

1204-004

*Designed for gates with 2-inch (50.8 mm) frame.*

# 9024 DC Slide Gate Operator

## Adjustable Limit Slide Gate Operator

**9024**

- Input 115/230 VAC or 24 VDC (Solar)
- Adjustable Limits
- Plug-in Loop Detector Ports
- Gate Tracker Data Output
- Built-in power and reset switches
- 20-Feet (6 m) #40 Nickel Plated Chain
- Polypropylene cover
- 30:1 Gear Reducer Drive Train
- Built-in Battery Backup
- Galvanized steel frame
- Magnetic lock output
- Overlap feature for bi-parting gates

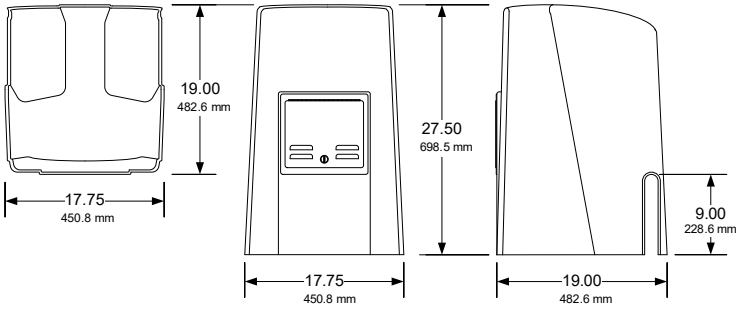


| Model | Maximum Gate Weight | Maximum Gate Length | Mount | Class of Operation[1] | Voltage | HP | Power Outlets | Maximum Cycles / Day | Loop Ports[2] | Adjustable Clutch |
|---|---|---|---|---|---|---|---|---|---|---|
| 9024 | 1000 Lbs 453 KG | 40 Ft 12.2 m | Pad or Post[5] | I, II, III, IV | 115/230 VAC | 1/2 | 2 | Continuous[3] | 2 | No |
| 9024[6] | 1000 Lbs 453 KG | 40 Ft 12.2 m | Pad or Post[5] | I, II, III, IV | 24 VDC (Solar) | 1/2 | 0 | Up to 150[4] | 2 | No |

1. I = Residential; II = Commercial; III = Limited Access; IV = Restricted Access
2. Plug-in loop detector ports; open and reverse. DoorKing plug-in loop detectors only.
3. Continuous operation is when AC power is present. Operation on battery backup (7.5 Ah batteries) is limited to approximately 40 cycles.
4. Up to 150 cycles with 18 Ah batteries. Actual number of cycles will vary depending on usage, accessories connected, gate weight, operating condition of gate, temperature and charge state of the batteries. Charge state of batteries is affected by geographical location of the product when using solar to recharge the batteries.
5. Requires post mounting kit.
6. Solar powered operators will not support bi-parting (dual) gate operation.

# 9024 DC Slide Gate Operator

## Adjustable Limit Slide Gate Operator

### Choose an Operator

9024-380 115/230 VAC

*Includes two 7.5 Ah batteries for limited backup operation.*

*Includes 50 feet (15 m) of RS 485 interconnection cable for bi-parting (dual) gate operation.*

9024-381 24 VDC (Solar)

*24 VDC solar input power only (supply your own batteries and solar charging system or use DKS solar kit).*

*Solar powered operators will not support bi-parting (dual) gate operation.*

### Entrapment Protection - Required

*Use Type B1 (non-contact) and/or Type B2 (contact) entrapment protection devices to protect all areas where the risk of entrapment exist - see pages 50 - 51.*

***Operator will not run without entrapment protection devices connected to the controller board. Minimum of two (one in each direction of travel) is required. See installation manual for more information.***

### Battery / Solar Options

1801-004 12-Volt, 18 Ah Battery[1]

2000-077 24-Volt, 10-Watt Solar Panel

2000-070 Solar Kit[2]

*1. Two required for 24 Volt operation.*

*2. Kit includes two (2) 18 Ah batteries, 10-Watt solar panel and bracket.*

### Loops and Loop Detectors - Optional

*See page 52 for a complete list of all loop detectors, prefabricated loops and loop accessories available.*

### Surge Suppression - Recommended

1879-080 High Voltage (120 VAC)

### Accessories

8060-082 RF Kit (Receiver + MicroPlus TX (1)

9000-015 Post Mount Kit[1]

9000-014 Post Mount Base Plate

2600-961 Chain Link Fence Gate Bracket

1601-154 Heater Kit 120 VAC[2]

1601-197 Heater Kit 208/230 VAC[2]

*1. Includes base plate, mounting posts and hardware.*

*2. Heater turns on when temperature falls below 40°F (4.4°C).*

### Backup Power Inverter - Optional

1000-083 1000-Watt, Pure Sine Wave

1000-045 Inverter Post Mount Kit

*See page 54 for more information.*

### Bi-Parting (Dual) Gate Interconnection Cable RS 485

9024-136 50-Ft. (15 m)

### Guarded Guide Rollers & Bracket Assembly

1204-120 Single 3-in (76.2 mm)

1204-122 Dual 3-in (76.2 mm)

1204-121 Single 6-in (152.4 mm)

1204-123 Dual 6-in (152.4 mm)

1204-005 Replacement Roller 3-in (76.2 mm)

*See page 47 for more information.*

### V-Wheels - Max Gate Weight

1201-102 UHMW 4-in (101.6 mm) 500 lb. (227 kg)

1201-105 UHMW 4-in (101.6 mm) 750 lb. (340 kg)

1201-117 Steel 4-in (101.6 mm) 1500 lb. (680 kg)

*See page 46 for more information.*

### V-Wheels Tandem – Max Gate Weight

1201-012 UHMW 4-in (101.6 mm) 1500 lb. (680 kg)

1201-010 Steel 4-in (101.6 mm) 3000 lb. (1360 kg)

1201-210 Steel 6-in (152.4 mm) 5000 lb. (2268 kg)

*See page 46 for more information.*

### Chain

2600-442 #40 Chain, Nickel Plated, 20-Ft (6 m)

2600-818 Chain Idler Assembly[1]

*1. Use with rear-mounted operators.*

### End Catch

1204-004

*Designed for gates with 2-inch (50.8 mm) frame.*

# 9050 / 9100 Slide Gate Operators

## Automatic Magnetic Limits

**9050 / 9100**

- Self-Adjusting Magnetic Limits
- Built-in clutch
- Plug-in Loop Detector Ports
- Built-in power and reset switches
- Two 115 VAC convenience outlets
- Fail-Safe Configuration

**9100**

- G90 Galvanized steel frame
- Steel or Polypropylene (Poly) cover
- 20-Feet (6 m) #40 Nickel Plated Chain
- Gate tracker data output (9100 only)
- Selectable stop/ reverse function (9100 only)
- Partial open / anti-tailgate feature (9100 only)

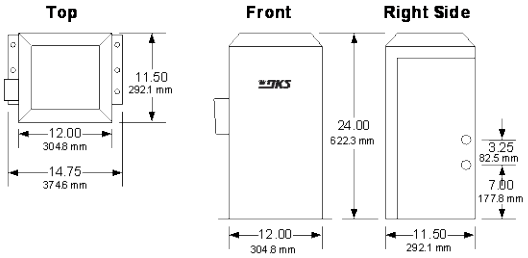


Metal Cover

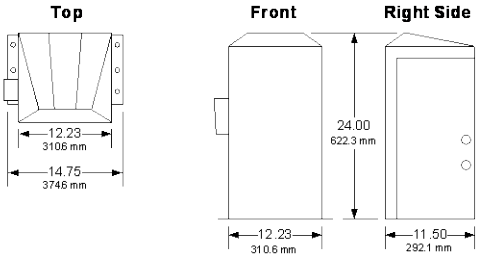


Polypropylene Cover

| Model | Maximum Gate Weight | Maximum Gate Length | Mount | Class of Operation[1] | Voltage | HP | Power Outlets | Maximum Cycles / Day | Loop Ports[2] | Adjustable Clutch[3] |
|---|---|---|---|---|---|---|---|---|---|---|
| 9050 | 700 Lbs<br>318 KG | 20 Ft<br>6.09 m | Pad or Post[4] | I | 115 VAC | 1/2 | 2 | 100 | 2 | Yes |
| 9100 | 1000 Lbs<br>453 KG | 30 Ft<br>9.14 m | Pad or Post[4] | I, II, III, IV | 115 VAC | 1/2 | 2 | Continuous | 2 | Yes |

1. I = Residential; II = Commercial; III = Limited Access; IV = Restricted Access
2. Plug-in loop detector ports; open and reverse. DoorKing plug-in loop detectors only.
3. Clutch is not applicable as an entrapment protection device.
4. Requires post mount steel base plate.

# 9050 / 9100 Slide Gate Operators

## Automatic Magnetic Limits

### Choose an Operator

9050-380 ½ HP Metal Cover

9050-385 ½ HP Poly Cover[1]

9100-380 ½ HP Metal Cover

9100-385 ½ HP Poly Cover[1]

*1. Includes 8060-082 RF Kit.*

### Entrapment Protection - Required

*Use Type B1 (non-contact) and/or Type B2 (contact) entrapment protection devices to protect all areas where the risk of entrapment exist - see pages 50 - 51.*

***Operator will not run without entrapment protection devices connected to the controller board. Minimum of two (one in each direction of travel) is required. See installation manual for more information.***

### Loops and Loop Detectors - Optional

*See page 52 for a complete list of all loop detectors, prefabricated loops and loop accessories available.*

### Surge Suppression - Recommended

1879-080 High Voltage (120 VAC)

### Accessories

8060-082 RF Kit (Receiver + MicroPlus TX (1)

2600-418 Steel Base Plate for 9050/9100

2600-970 Base Plate Stop Bracket[1]

2600-865 Fail-Secure Lock Kit[2]

2600-961 Chain Link Fence Gate Bracket

1601-154 Heater Kit 120 VAC[3]

1601-197 Heater Kit 208/230 VAC[3]

1601-198 Heater Kit 480 VAC[3]

*1. Use with 2600-418 base plate.*

*2. Operators come standard in a Fail-Safe configuration.*

*3. Heater turns on when temperature falls below 40°F (4.4°C).*

### Chain

2600-442 #40 Chain, Nickel Plated, 20-Ft (6 m)

2600-271 Chain Stop #40, #41 Chain

2600-818 Chain Idler Assembly[1]

*1. Use with rear-mounted operators.*

### Backup Power Inverter - Optional

1000-083 1000-Watt, Pure Sine Wave

1000-045 Inverter Post Mount Kit

*See page 54 for more information.*

### Bi-Parting (Dual) Gate Interconnection Cable

2600-755 30-Ft. (9.1 m)

2600-756 40-Ft. (12.2 m)

2600-757 50-Ft. (15.2 m)

2600-754 500-Ft. (152.4 m)

### Guarded Guide Rollers & Bracket Assembly

1204-120 Single 3-in (76.2 mm)

1204-122 Dual 3-in (76.2 mm)

1204-121 Single 6-in (152.4 mm)

1204-123 Dual 6-in (152.4 mm)

1204-005 Replacement Roller 3-in (76.2 mm)

*See page 47 for more information.*

### V-Wheels - Max Gate Weight

1201-102 UHMW 4-in (101.6 mm) 500 lb. (227 kg)

1201-105 UHMW 4-in (101.6 mm) 750 lb. (340 kg)

1201-117 Steel 4-in (101.6 mm) 1500 lb. (680 kg)

*See page 46 for more information.*

### V-Wheels Tandem – Max Gate Weight

1201-012 UHMW 4-in (101.6 mm) 1500 lb. (680 kg)

1201-010 Steel 4-in (101.6 mm) 3000 lb. (1360 kg)

1201-210 Steel 6-in (152.4 mm) 5000 lb. (2268 kg)

*See page 46 for more information.*

### End Catch

1204-004

*Designed for gates with 2-inch (50.8 mm) frame.*

# 9150 Slide Gate Operators

## Automatic Magnetic Limits

**9150**

- Self-Adjusting Magnetic Limits
- Built-in clutch
- Plug-in Loop Detector Ports
- Built-in power and reset switches
- Two 115 VAC convenience outlets
- Fail-Safe Configuration
- G90 Galvanized steel frame
- Steel or Polypropylene (Poly) cover
- 20-Feet (6 m) #40 Nickel Plated Chain
- Gate tracker data output
- Selectable stop/ reverse function
- Partial open / anti-tailgate feature

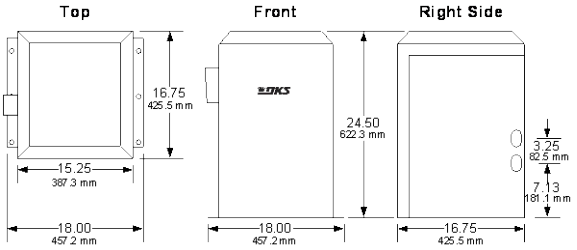


Metal Cover

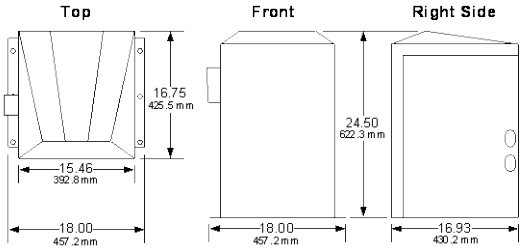


Polypropylene Cover

| Model | Maximum Gate Weight | Maximum Gate Length | Mount | Class of Operation[1] | Voltage[2] | HP | Power Outlets | Maximum Cycles / Day | Loop Ports[3] | Adjustable Clutch[4] |
|---|---|---|---|---|---|---|---|---|---|---|
| 9150 | 1000 Lbs<br>454 KG | 30 Ft<br>9.14 m | Pad or Post[5] | I, II, III, IV | 115 208<br>230 460<br>575 VAC | 1/2 | 2 | Continuous | 2 | Yes |
| 9150 | 1500 Lbs<br>680 KG | 45 Ft<br>13.7 m | Pad or Post[5] | I, II, III, IV | 115 208<br>230 460<br>575 VAC | 1 | 2 | Continuous | 2 | Yes |

1. I = Residential; II = Commercial; III = Limited Access; IV = Restricted Access.
2. High voltage kit (P/N 2600-266) required for 208 Volt and higher.
3. Plug-in loop detector ports; open and reverse. DoorKing plug-in loop detectors only.
4. Clutch is not applicable as an entrapment protection device.
5. Requires post mount steel base plate.

# 9150 Slide Gate Operators

## Automatic Magnetic Limits

### Choose an Operator

9150-384 ½ HP Metal Cover

9150-386 ½ HP Poly Cover[1]

9150-380 1 HP Metal Cover

9150-385 1 HP Poly Cover[1]

*1. Includes 8060-082 RF Kit.*

### High Voltage Kit - Optional

2600-266 High Voltage Kit

*Allows the operator to be powered from 208, 230, 460 or 575 VAC source voltage.*

### Entrapment Protection - Required

*Use Type B1 (non-contact) and/or Type B2 (contact) entrapment protection devices to protect all areas where the risk of entrapment exist - see pages 50 - 51.*

***Operator will not run without entrapment protection devices connected to the controller board. Minimum of two (one in each direction of travel) is required. See installation manual for more information.***

### Loops and Loop Detectors - Optional

*See page 52 for a complete list of all loop detectors, prefabricated loops and loop accessories available.*

### Surge Suppression - Recommended

1879-080 High Voltage (120 VAC)

### Accessories

8060-082 RF Kit (Receiver + MicroPlus TX (1)

2600-495 Steel Base Plate

2600-865 Fail-Secure Lock Kit[1]

2600-961 Chain Link Fence Gate Bracket

1601-154 Heater Kit 120 VAC[2]

1601-197 Heater Kit 208/230 VAC[2]

1601-198 Heater Kit 480 VAC[2]

*1. Operators come standard in a Fail-Safe configuration.*

*2. Heater turns on when temperature falls below 40°F (4.4°C).*

### Backup Power Inverter - Optional

1000-083 1000-Watt, Pure Sine Wave

1000-045 Inverter Post Mount Kit

*See page 54 for more information.*

### Bi-Parting (Dual) Gate Interconnection Cable

2600-755 30-Ft. (9.1 m)

2600-756 40-Ft. (12.2 m)

2600-757 50-Ft. (15.2 m)

2600-754 500-Ft. (152.4 m)

### Guarded Guide Rollers & Bracket Assembly

1204-120 Single 3-in (76.2 mm)

1204-122 Dual 3-in (76.2 mm)

1204-121 Single 6-in (152.4 mm)

1204-123 Dual 6-in (152.4 mm)

1204-005 Replacement Roller 3-in (76.2 mm)

*See page 47 for more information.*

### V-Wheels - Max Gate Weight

1201-102 UHMW 4-in (101.6 mm) 500 lb. (227 kg)

1201-105 UHMW 4-in (101.6 mm) 750 lb. (340 kg)

1201-117 Steel 4-in (101.6 mm) 1500 lb. (680 kg)

*See page 46 for more information.*

### V-Wheels Tandem – Max Gate Weight

1201-012 UHMW 4-in (101.6 mm) 1500 lb. (680 kg)

1201-010 Steel 4-in (101.6 mm) 3000 lb. (1360 kg)

1201-210 Steel 6-in (152.4 mm) 5000 lb. (2268 kg)

*See page 46 for more information.*

### Chain

2600-442 #40 Chain, Nickel Plated, 20-Ft (6 m)

2600-271 Chain Stop #40, #41 Chain

2600-818 Chain Idler Assembly[1]

*1. Use with rear-mounted operators.*

### End Catch

1204-004

*Designed for gates with 2-inch (50.8 mm) frame.*

# Slide Gate Accessories

## V-Wheels

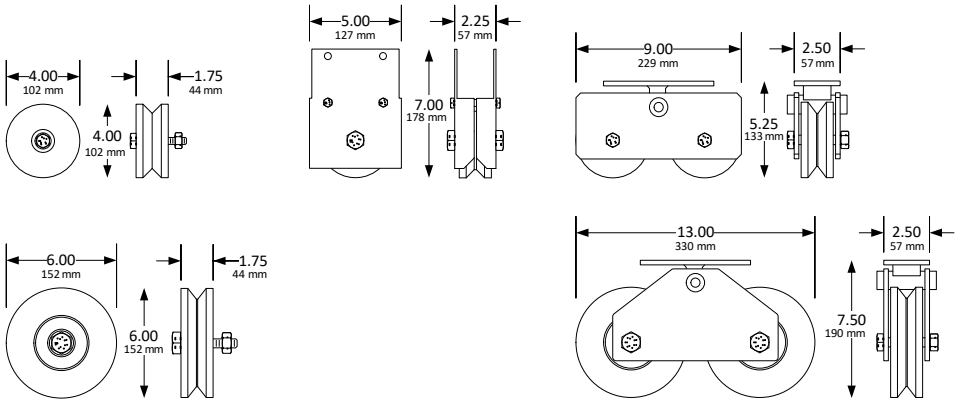


**V-Wheels** **V-Wheel Assembly** **Tandem V-Wheel Assembly**

**4-Inch (102 mm) V-Wheels**

1201-004 UHMW w/sleeve bearing

- 500 Lb. (226 Kg) maximum weight

1201-006 UHMW w/sealed bearing

- 750 Lb. (340 Kg) maximum weight

1201-016 Steel w/sealed bearing

- 1500 Lb. (680 Kg) maximum weight

**4-Inch (102 mm) V-Wheel Assemblies[1]**

1201-102 UHMW w/sleeve bearing

- 500 Lb. (226 Kg) maximum weight

1201-105 UHMW w/sealed bearing

- 750 Lb. (340 Kg) maximum weight

1201-117 Steel w/sealed bearing

- 1500 Lb. (680 Kg) maximum weight

1. Assemblies include wheel guarding as required by industry safety standards.

**4-Inch (102 mm) Tandem V-Wheel Assemblies**

1201-012 UHMW w/sealed bearing

- 1500 Lb. (680 Kg) maximum weight

1201-010 Steel w/sealed bearing

- 3000 Lb. (1360 Kg) maximum weight

**6-Inch (152 mm) V-Wheel**

1201-000 Steel w/sealed bearing

- 2500 Lb. (1133 Kg) maximum weight

**6-Inch (152 mm) Tandem V-Wheel Assembly**

1201-210 Steel w/sealed bearing

- 5000 Lb. (2267 Kg) maximum weight

# Slide Gate Accessories

## Guide Rollers, Chain Idler, End Catch

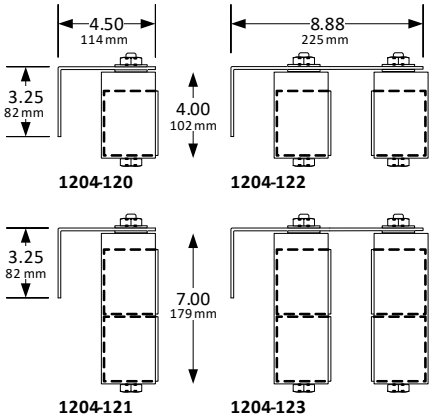


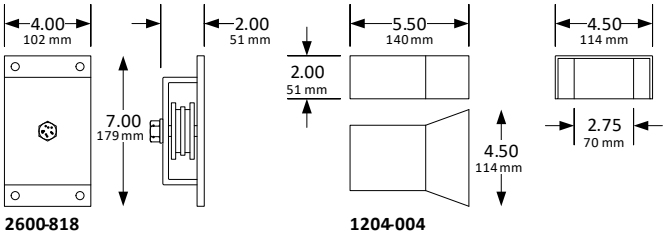


**3-Inch (76 mm) Guide Roller Assemblies[1]**

1204-120 Single

1204-122 Dual

1. Assemblies include roller guarding as required by industry safety standards.

**6-Inch (152 mm) Guide Roller Assemblies[1]**

1204-121 Single

1204-123 Dual

1. Assemblies include roller guarding as required by industry safety standards.

**3-Inch (76 mm) Replacement Roller**

1204-005

**Chain Idler Assembly**

2600-818

- Use this with rear-mounted slide gate operators. Works with #40 and #41 chain.

**End Catch**

1204-004

- Use with 2-inch (51 mm) gate frame.

# Slide Gate Operator Parts & Accessories

## Miscellaneous Parts & Accessories

**Plug-in RF Receiver**

8045-010

Plug-in RF Receiver compatible with MicroPlus and MicroClik transmitters. Use only with 2100 Series operators.

**Smart Gate Controller**

1800-500

Allows control of the gate operator from your smartphone. Requires a WiFi connection and the Smart Connect App (available from the App Store and Google Play). Compatible with Alexa, Google Home and Siri. Maximum 20 users.

**Circuit Boards / Controllers**

2100-100 Controller
Use with 2100 Series operators only

4100-018
Used in model 9024

4405-018
Used in model 9000

4602-018
Used in models 9100, 9150

4702-018
Used in models 9050

**Chain**

2600-442 #40 Chain, Nickel Plated – 20 Ft (6 m)

2600-271 Chain Stop for #40 and #41 Chain

2600-961 Chain Link Fence Gate Bracket

**Base Plates**

2600-418 Steel Base Plate
Use with 9050 and 9100 operators

2600-495 Steel Base Plate
Use with 9150 operator

2600-970 Base Plate Stop Bracket
Use with 2600-418

**Bi-Parting Connection Cable**

2600-755 30-Ft. (9.1 m)

2600-756 40-Ft. (12.2 m)

2600-757 50-Ft. (15.2 m)

2600-754 500-Ft. (152.4 m)

# Blank Page

# Entrapment Prevention Devices

## Non-contact Sensors Type B1

### Thru-Beam

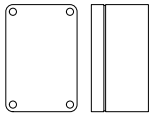

8080-052

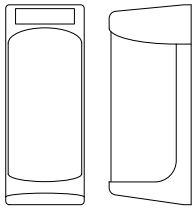

8080-054

### Photo-Reflective

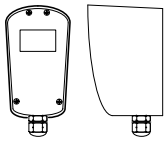

8080-057

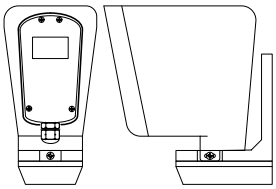

8080-060

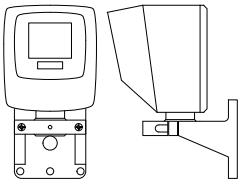

8080-053

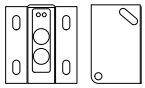

8080-055

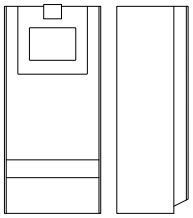

8080-056

**Thru-Beam Devices**

8080-052 (EMX MON)

- 115 Ft. (35 m) maximum sensing distance.
- 12-24 VAC / 6-35 VDC.
- Includes hood.

8080-054 (Seco-Larm E960-D90GQ)

- 90 Ft. (27 m) maximum sensing distance.
- 12-30 VAC / VDC.

**Photo-Reflective Devices**

8080-057 (DKS)

- 35 Ft. (10.6 m) maximum sensing distance.
- Receiver 12-24 VAC / VDC.

8080-060 (DKS) Deluxe

- 35 Ft. (10.6 m) maximum sensing distance.
- Receiver 12-24 VAC / VDC.
- Deluxe housing simplifies installation.

8080-053 (EMX IRB-RET2)

- 60 Ft. (18 m) maximum sensing distance.
- 12-24 VAC / 6-35 VDC.

8080-055 (Seco-Larm E936-S45RRGQ)

- 45 Ft. (14 m) maximum sensing distance.
- 12-30 VAC / VDC.

8080-056 (Omron E3K)

- 33 Ft. (10 m) maximum sensing distance.
- 24-240 VAC / VDC.



Specifications subject to change without notice.

# Entrapment Prevention Devices

## Contact Sensors Type B2

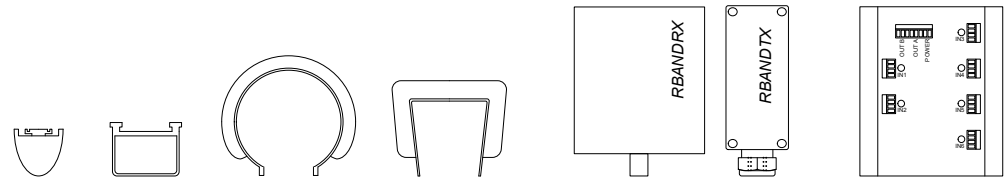


**8080-250**
**8080-254**
**8080-260**
**8080-264**

**8080-070**
**8080-090**

**8080-065**
**8080-085**

**8080-066**
**8080-086**

**8080-008**

**8080-006**

**8080-079**

**DoorKing Devices**

**2-Wire Contact Edge with 10K Termination**

8080-260 6 Ft. (1.8 m)

8080-250 5 Ft. (1.5 m)

**4-Wire Contact Edge[1]**

8080-264 6 Ft. (1.8 m)

8080-254 5 Ft. (1.5 m)

1. 4-wire edges do not have 10K termination and are designed to be used wired in series with the 2-wire edges.

**Miller Edge Devices**

**2-Wire Contact Edge with 10K Termination**

8080-070 5 Ft. (1.5 m) ME123-T2

8080-065 5 Ft. (1.5 m) MGR20-T2

8080-066 5 Ft. (1.5 m) MGS20-T2

**4-Wire Contact Edge[1]**

8080-090 5 Ft. (1.5 m) ME123

8080-085 5 Ft. (1.5 m) MGR20

8080-086 5 Ft. (1.5 m) MGS20

1. 4-wire edges do not have 10K termination and are designed to be used wired in series with the 2-wire T2 edges.

**Contact Sensor Accessories**

8080-079 Multiple Input Module (MIM 62)

- Monitors up to six (6) external contact edges.

8080-008 Wireless Monitored Link (RB-G-K10)[1]

- Receiver: 12-24 VAC / VDC.
- Transmitter: 3.6 VDC / 2 AA Lithium.
- Receiver can monitor up to six (6) edges.

1. Kit includes receiver and one (1) RB-TX-10 transmitter.

8080-006 Monitored Transmitter (RB-TX-10)

# Vehicle Protection

## Loop Detectors and Loops

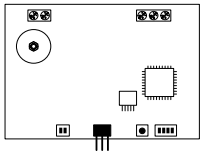

**9411-010**

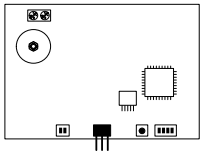

**9410-010 / 9416-010**

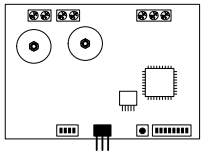

**9409-010 / 9415-010**



**2100-221 / 2100-222**

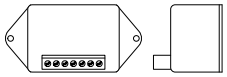

**9402-050**

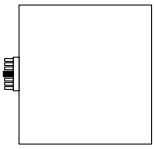

**9402-090**

**DKS Plug-In Loop Detectors (Legacy Operators)**
9411-010 Single Channel + Aux Relay
9410-010 Single Channel
9409-010 Two Channel
9415-010 Two Channel Low Power Draw
9416-010 Single Channel Low Power Draw

**DKS Plug-In Loop Detectors (2100 Series Operators)**
2100-221 Single Channel
2100-222 Dual Channel

**Diablo Wired Loop Detector**
9402-050 10-30 VAC / VDC Low Power Draw

**EMX MVP-2 Loop Detector**
9402-090 Two Channel AB Logic
9402-062 Wire Harness Required

**Loop Wire – 18 AWG – XLPE Insulation**
9402-076 500 Ft. (152 m) Black
9402-077 1000 Ft. (304 m) Black
9402-078 500 Ft. (152 m) Blue
9402-079 1000 Ft. (304 m) Blue
9402-080 500 Ft. (152 m) Red
9402-081 1000 Ft. (304 m) Red

**Prefabricated Loops[1]**
9401-060 Blue Wire
9401-061 Yellow Wire
9401-062 Red Wire
24 Ft. (7 m) circumference, 50 Ft. (15 M) lead-in wire.

**Loop Accessories**
9401-045 Meg-Ohm Test Meter



Specifications subject to change without notice.

# Control Stations

## Manual Control Stations

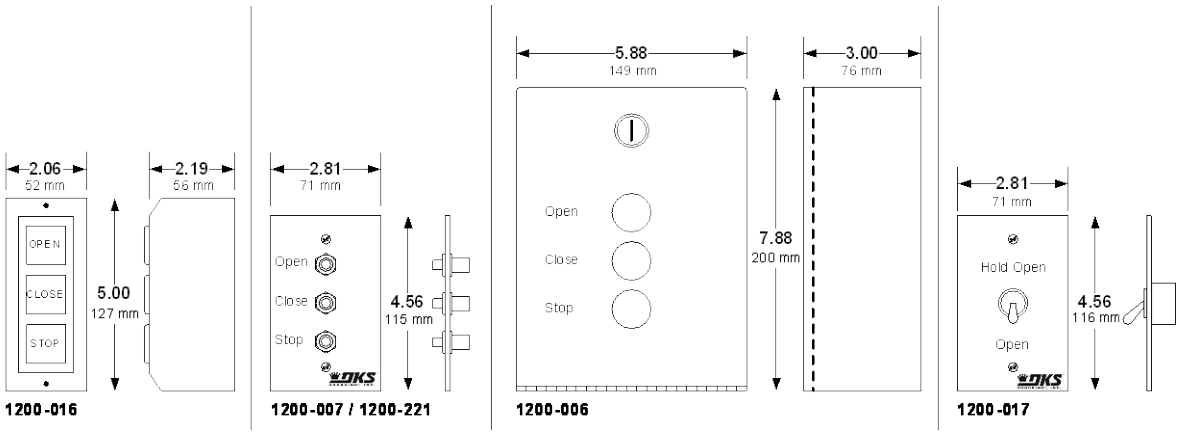


**3-Button Control N.C Stop Circuit**

1200-016 Indoor use only

1200-221 Indoor use only

- Mounts into single-gang electrical box.

**3-Button Control N.O. Stop Circuit[1]**

1200-007 Indoor use only

- Mounts into single-gang electrical box.

1200-006 Indoor or Outdoor use

- Wall mount

1. These control stations use a normally open stop circuit and can only be used with models 6050, 6100, 6300 operators.

**Toggle Control 3- Position**

1200-017 Indoor use only

- Mounts into single-gang electrical box
- Center – Neutral
- Momentary – Down
- Toggle - Up

# Model 1000

## Back-up Power / Inverter

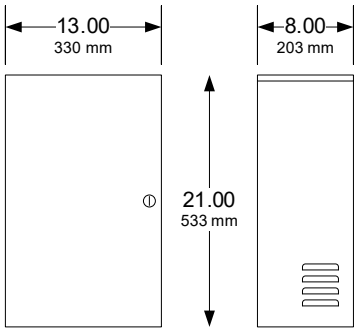


**1000-083**

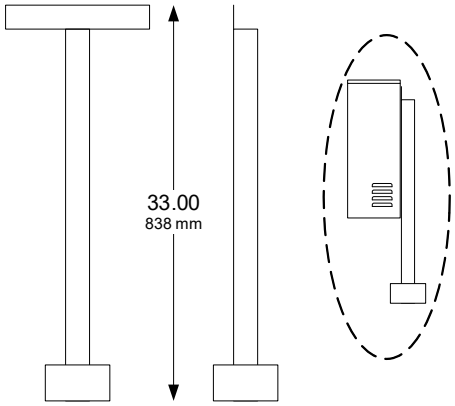


**1000-045**

**Model 1000 Power Inverter**

1000-083 Pure Sine Wave, 1000 Watt

- Includes two (2) 12V, 35Ah batteries.
- Will power two (2) ½ HP operators or a single 1 HP operator.
- Suitable for use with DoorKing Class I and Class II gate operators and most other residential / light commercial gate operator brands.

**Accessories / Replacement Parts**

1000-045 Post Mount

1801-005 12-Volt, 35 Ah SLA Battery

1000-044 Battery Cable Set

1000-048 Battery (35 Ah) + Cable Set



Specifications subject to change without notice.